HV Green Mode PWM Controller with Xcap Discharge

General Description

The NE1118 is a highly integrated PWM controller. It is built-in with several features to enhance the performance of off-line power supply in SOP-8 package. In light load condition, NE1118 automatically folds back the operation frequency to 25 kHz to achieve best efficiency. Under no load condition, the controller enters burst mode and limits the peak current to avoid audible noise. The NE1118 is designed for high performance SMPS and integrates a jittering function that helps reduce EMI emission of a power supply with minimum EMI filters. With the adjustable OPP function integrated in HV pin, it is easy to design the over power protection well under high/low line condition.

Features

- HV startup with low leakage current, Brown out function.
- Supplementary bias charging during load transient.
- Low power consumption through x-cap discharge switch.
- System Open Loop Protection.
- Output Short Circuit Protection.
- Internal 4mS Soft Start Time Period.
- Internal 240nS Leading Edge Blanking.
- +500mA/-800mA Gate Drive Capability.
- Frequency Jittering for EMI Reduction.
- Internal Slope Compensation with Self Detection.
- Meet Pb-Free, Halogen Free and RoHS compliant.

Applications

- General up to 110W Switched Mode Power Supply(SMPS)
- AC Adaptors for High Performance Notebook PC, Printer
- Off-Line Battery Charger
- LCD Monitor, Set-Top Boxes, DVD, Power Tools
- Open-Frame SMPS
- Standby Power for TV, PC, Home Appliances

Package

SOP-8 package

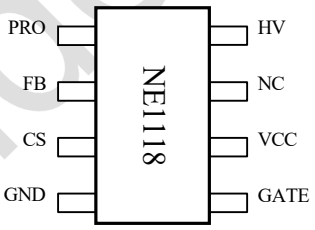

Typical Application

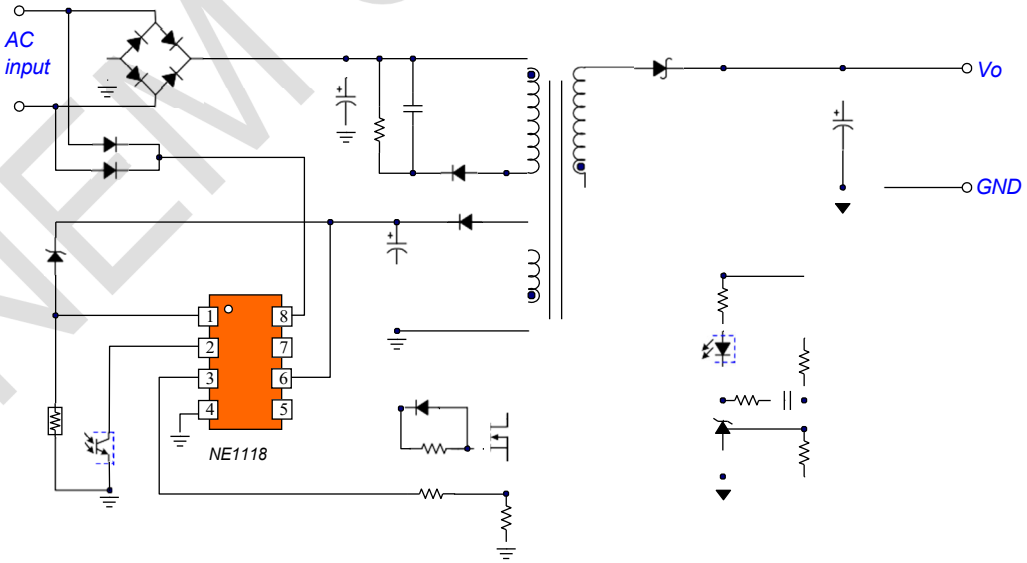

NEM Confidential

Function Block Diagram

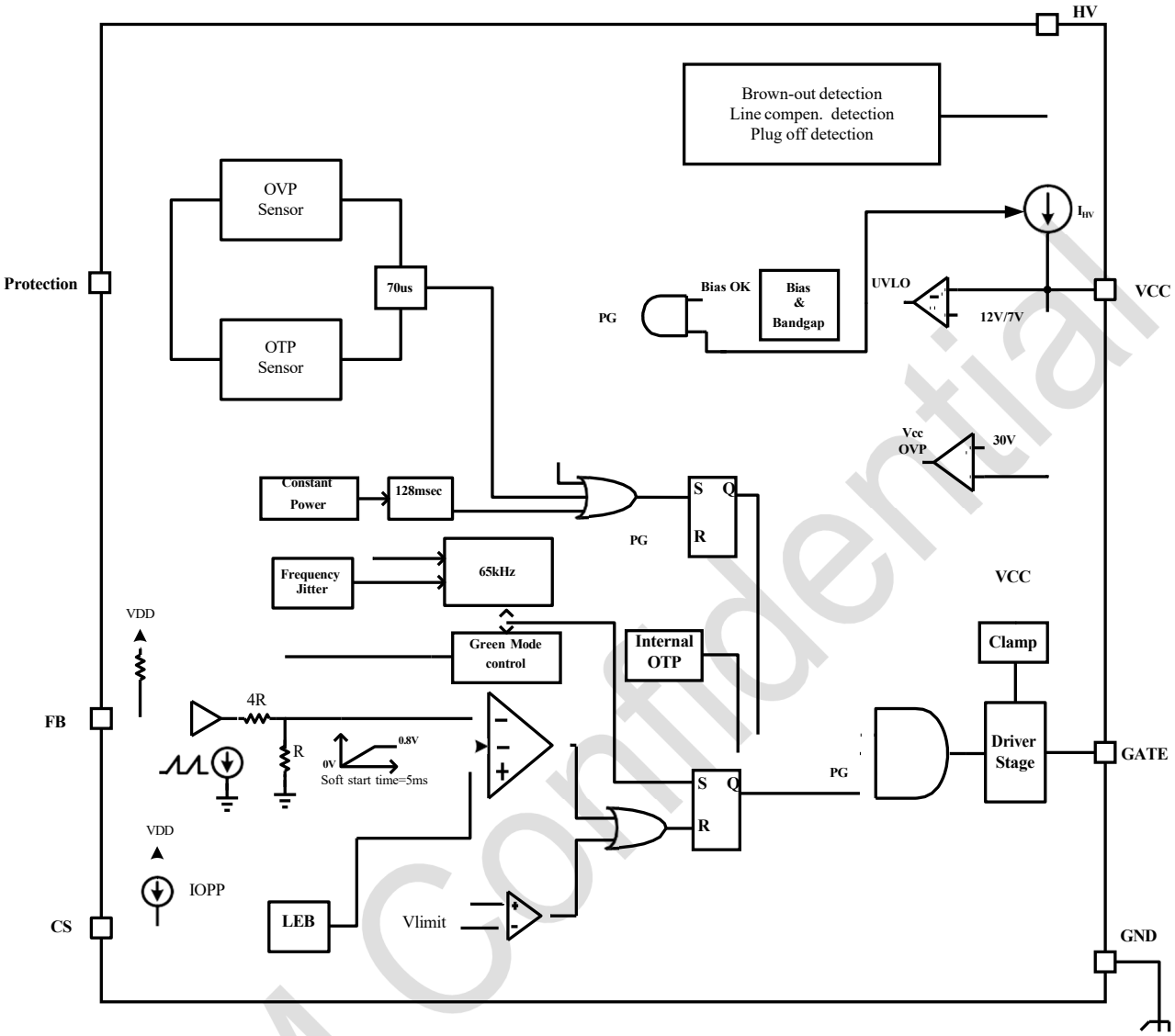

NEM Confidential

Function Pin Description

Pin Name	Pin Number	Function Description
PRO	1	Various protections (OVP, OTP, Enable and latch/auto-recovery).
FB	2	Voltage feedback pin. Connect a photo-coupler to close the control loop for output voltage regulation.
CS	3	Current sense.
GND	4	Ground.
GATE	5	Gate drive of the main MOSFET switch.
VCC	6	Supply voltage.
NC	7	No connection.
HV	8	High voltage start-up and offer power up current.

NEM Confidential

Absolute Maximum Ratings(note 1)

- Supply Input Voltage, Vcc..... V
- GATE pin..... V
- FB,CS,Protection pin V
- HV pin… V
- Junction Temperature…..... 150℃
- Lead Temperature (10sec) .....260℃
- Storage Temperature Range..-60℃to150℃
- ESD Susceptibilty(note 2)
  HBM (Human Body Mode)..... KV
  MM (Machine Mode)…..... V
- Power Dissipation, PD@TA=25℃,
  8SOP 0.76W
- Package Themal Resistance
  8SOP, θJA ..... 165.5℃/W

Recommended Operating Conditions

- Supply Voltage ,Vcc..... V to 27V
- Junction Temperature Range -40°C to 125℃
  Ambient Temperature Range…- 40°C to 85℃

Marking Information:

NE1118C= Device
Y=YEAR
M=Month
D=Date
X=Assembly Info.
N=Serial No.

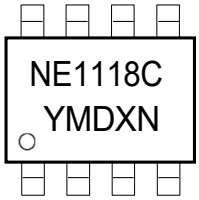

Ordering Information:

Part	Pin 1 High/Low	Brown out delay	OPP delay	OLP Load	Marking	Shipment
NE1118C	Auto/Auto-recovery	33ms	20ms	Auto-recovery	NE1118C	2500pcs/Reel
NE1118D	Latch/Auto-recovery	60ms	100ms	Auto-recovery	NE1118D	2500pcs/Reel

Note 1: Stresses beyond 'Absolute Maximum Ratings' may cause permanent damage to the device.

Note 2: Devices are ESD sensitive. Handling precaution recommended. The human body model is 100pF capactor discharged through a 1.5KΩ resistor into each pin.

NEM Confidential

以上内容仅为本文档的试下载部分，为可阅读页数的一半内容。如要下载或阅读全文，请访问：https://d.book118.com/166022232001010033