Contents

General Description ---------- (3)

1. Absolute Maximum Ratings ---------- (4)
   1.1 Absolute ratings of environment
   1.2 Electrical Absolute Ratings
2. Optical Characteristics ---------- (6)
3. Electrical Characteristics ---------- (9)
   3.1 TFT LCD Module
   3.2 Back-light Unit
4. Block Diagram ---------- (12)
   4.1 TFT LCD Module
   4.2 Back-light Unit
5. Input Terminal Pin Assignment ---------- (13)
   5.1 Input Signal & Power
   5.2 LVDS Interface
   5.3 Back-light Unit
   5.4 Input Signals, Basic Display Colors and Gray Scale of Each Color
6. Interface Timing ---------- (18)
   6.1 Timing Parameters (DE only mode)
   6.2 Timing Diagrams of Interface Signal (DE only mode)
   6.3 Power ON/OFF Sequence
7. Outline Dimension ---------- (21)
8. General Precaution ---------- (23)
   8.1 Handling
   8.2 Storage
   8.3 Operation
   8.4 Others

General Description

* Description

LTM170EU-L11 is a color active matrix TFT (Thin Film Transistor) liquid crystal display (LCD) that uses amorphous silicon TFTs as switching devices. This model is composed of a TFT LCD panel, a driver circuit and a back-light system. The resolution of a 17.0" contains 1280 x 1024 pixels and can display up to 16.2 millions colors.

* Features

- High contrast ratio, high aperture structure
- TN(Twisted Nematic) mode
- Wide viewing angle
- High speed response
- SXGA(1280 x 1024 pixels) resolution
- Low power consumption
- 2 dual CCFTs(Cold Cathode Fluorescent Tube)
- DE(Data Enable) mode
- LVDS (Low Voltage Differential Signaling) interface (2pixel/clock)
- COMPACT SIZE DESIGN

* Applications

Workstation & desktop monitors
Display terminals for AV application products
Monitors for industrial machine

* General information

Items	Specification	Unit	Note
Display area	337.92(H) x 270.336(V)	mm	
Driver element	a-Si TFT active matrix		
Display colors	16.2M	colors	
Number of pixels	1280 x 1024	pixel	
Pixel arrangement	RGB vertical stripe		
Pixel pitch	0.264(H) x 0.264(W)	mm	
Display mode	Normally White		
Surface treatment	Haze 25% , Hard-coating (3H)		

*** Mechanical information**

Item		Min.	Typ.	Max.	Note
Module size	Horizontal(H)	-	358.5	-	mm
	Vertical(V)	-	296.5	-	mm
	Depth(D)	-	-	17.5	mm
Weight		-	-	2,100	g

1. Absolute Maximum Ratings

1.1 Absolute ratings of environment

Item	Symbol	Min.	Max.	Unit	Note
Storage temperature	TSTG	-25	60	℃	(1)
Operating temperature (Glass surface temperature)	TOPR	0	50	℃	(1)
Shock (non - operating)	Snop	-	50	G	(2),(4)
Vibration (non - operating)	Vnop	-	1.5	G	(3),(4)

Note (1) Temperature and relative humidity range are shown in the figure below.
90 % RH Max. (40 °C ≥ Ta)
Maximum wet-bulb temperature at 39 °C or less. (Ta > 40 °C) No condensation.

(2) 11ms, sine wave, one time for ±X, ±Y, ±Z axis

(3) 10-300 Hz, Sweep rate 10min, 30min for X,Y,Z axis

(4) At vibration and shock test, the fixture which holds the module to be tested has to be hard and rigid enough so that the module would not be twisted or bent by the fixture.

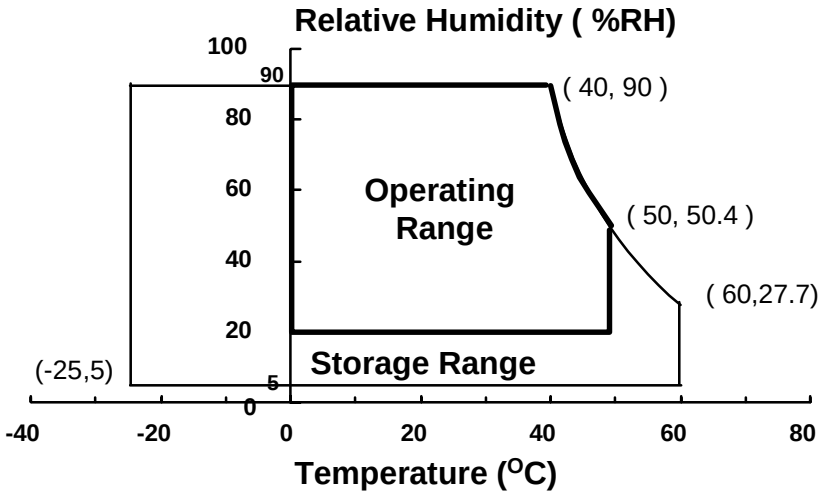

1.2 ELECTRICAL ABSOLUTE RATINGS

(1) TFT LCD Module (Vss = GND = 0 V)

Item	Symbol	Min.	Max.	Unit	Note
Power Supply Voltage	V_{DD}	Vss-0.5	6.5	V	(1)

NOTE (1) Within Ta (25 ± 2 °C)

(2) BACK-LIGHT UNIT (Ta = 25 ± 2°C)

Item	Symbol	Min.	Max.	Unit.	Note
Lamp Current	I_L	2.0	7.0	mArms	(1),(2)
Lamp Frequency	f_L	40	80	kHz	(1)

NOTE

(1) Permanent damage to the device may occur if maximum values are exceeded. Functional operation should be restricted to the conditions described under Normal Operating Conditions.

(2) Specified values are for a single lamp (Refer to the Note (1) in the page 11 for further information).

2. Optical Characteristics

The following items are measured under stable conditions. The optical characteristics should be measured in a dark room or equivalent state with the methods shown in Note (1).

Measuring equipment : TOPCON BM-5A, BM-7, PHOTO RESEARCH PR650
Eldim EZ-Contrast

(Inverter Freq. : 50kHz) * Ta = 25 ± 2°C, V_{DD}=5V, fv= 60Hz, f_{DCLK}=54MHz, I_L = 6.5mA_{rms}

Item		Symbol	Condition	Min.	Typ.	Max.	Unit	Note
Contrast Ratio (Center of screen)		C/R	Normal ϕ = 0 θ = 0 Viewing Angle	-	500	-		(3) BM-5A
Response Time	Rising	Tr		-	3	-	msec	(5) BM-7
	Falling	Tf		-	10	-		
Luminance of White (Center of screen)		YL		-	300	-	cd/m2	(6) BM-5A
Color Chromaticity (CIE 1931)	Red	Rx		-	0.650	-		(7) PR650
		Ry			0.330			
	Green	Gx			0.300			
		Gy			0.600			
	Blue	Bx			0.150			
		By			0.080			
	White	Wx			0.313			
		Wy			0.329			
Viewing Angle	Hor.	θ L	CR≥10	-	75	-	Degrees	(8) BM-5A
		θ R		-	75	-		
	Ver.	ϕ H		-	75	-		
		ϕ L		-	60	-		
Brightness Uniformity (9 Points)		Buni		-	-	25	%	(4) BM-5A

Note 1) Test Equipment Setup

The measurement should be executed in a stable, windless and dark room between 30min and 40min after lighting the back-light at the given temperature for stabilization of the back-light. This should be measured in the center of screen.

Single lamp current : 6.5mA (Refer to the note(1) in the page 11 for more information.)
Environment condition : Ta = 25 ± 2 °C

Photodetector	Field
BM-5A	2°
BM-7	2°
PR650	1°

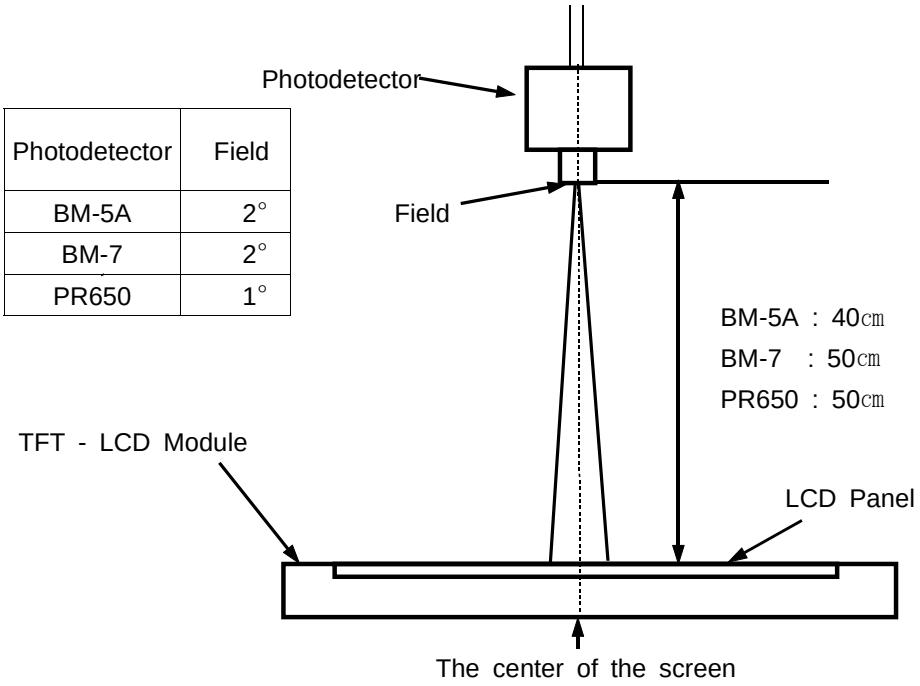

Optical Measuring Equipment Setup

Note 2) Definition of test point

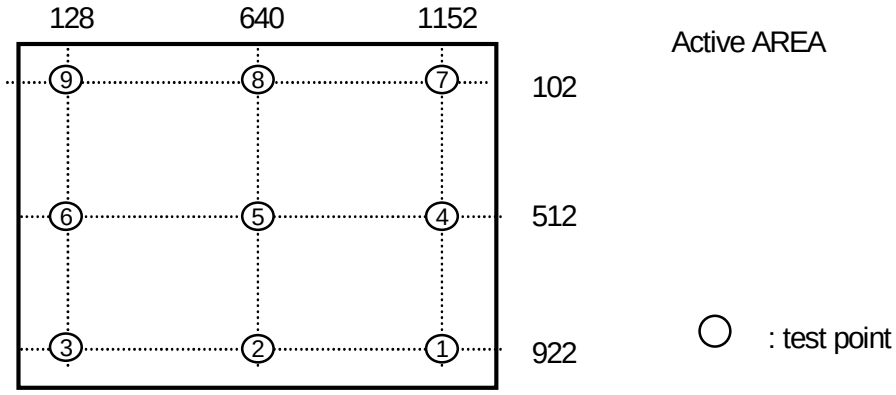

Note 3) Definition of Contrast Ratio (C/R) : Ratio of gray max (Gmax) & gray min (Gmin) at the center point⑤ of the panel

$$CR = \frac{G\max}{G\min}$$

Gmax : Luminance with all pixels white

Gmin : Luminance with all pixels black

Note 4) Definition of 9 points brightness uniformity

$$Buni = 100 * \frac{(B\max - B\min)}{B\max}$$

Bmax : Maximum brightness
Bmin : Minimum brightness

Note 5) Definition of Response time : Sum of Tr, Tf

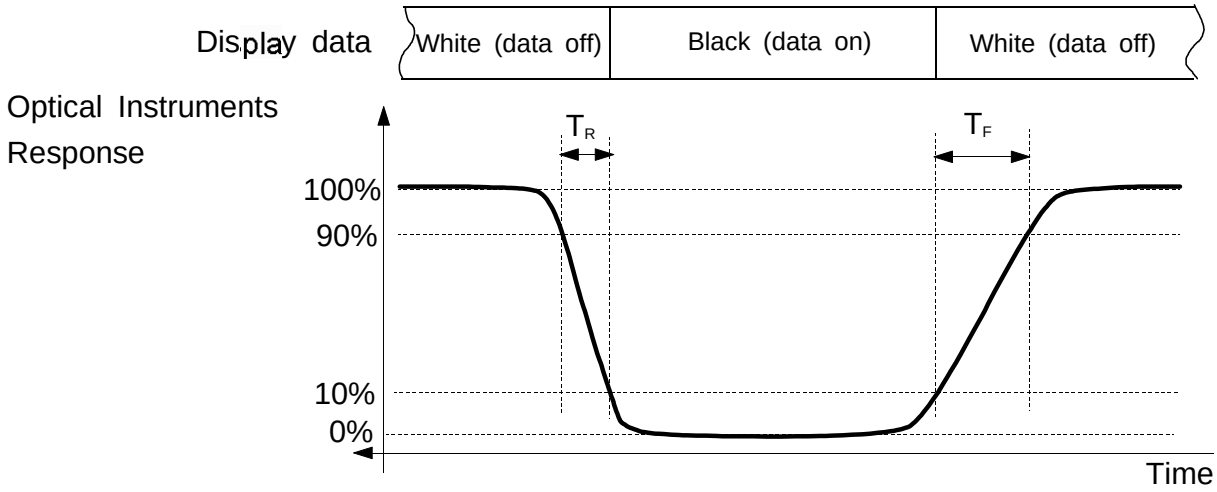

Note 6) Definition of Luminance of White : Luminance of white at center point⑤.

Note 7) Definition of Color Chromaticity (CIE 1931)
Color coordinate of Red, Green, Blue & White at center point⑤.

Note 8) Definition of Viewing Angle : Viewing angle range (CR ≥ 10)

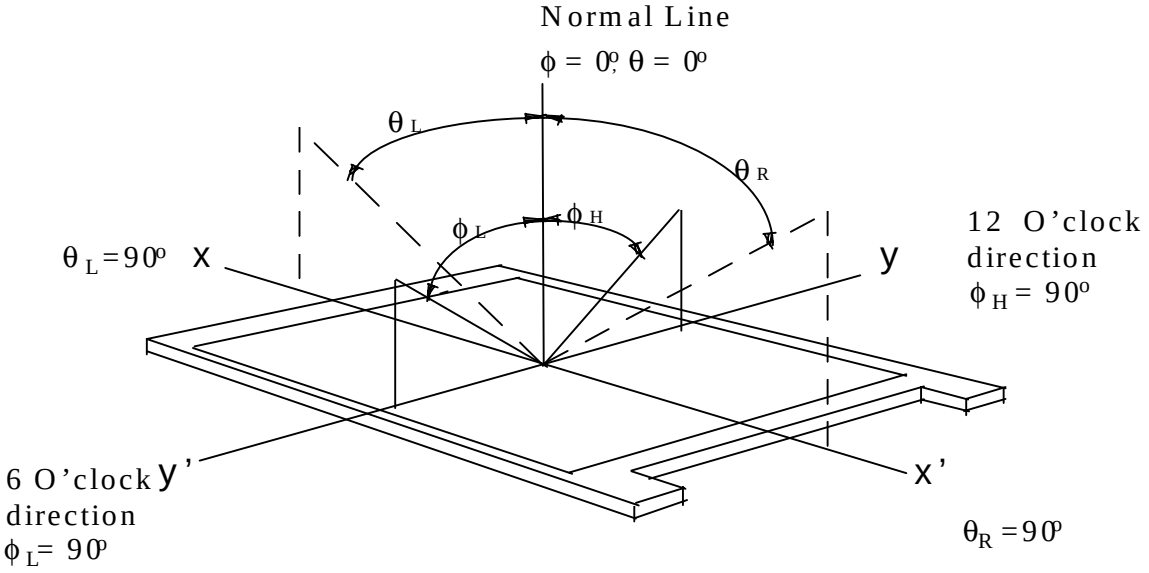

3. Electrical Characteristics

3.1 TFT LCD MODULE

Ta = 25°C

Item		Symbol	Min.	Typ.	Max.	Unit	Note
Voltage of Power Supply		V_{DD}	4.5	5.0	5.5	V	(1)
Interface type		LVDS	DS90C383/385 DS90C386 Pair				
Current of Power Supply	(a) Black	I_{DD}	-	600	-	mA	(2),(3)
	(b) White		-	500	-	mA	
	(c) Dot		-	700	850	mA	
Vsync Frequency		f_V	55	60	77	Hz	
Hsync Frequency		f_H	56.7	64	82.082	kHz	
Main Frequency		f_{DCLK}	40	54	69.28	MHz	
Rush Current		I_{RUSH}	-	-	3.0	A	(4)

Note (1) The connector for display data & timing signal should be connected.(Vss=0V)

(2) f_V=60Hz, f_{DCLK} =54MHz, V_{DD} = 5.0V, DC Current.

(3) Power dissipation check pattern(LCD Module only)

a) Black Pattern



b) White Pattern



c) Dot Pattern

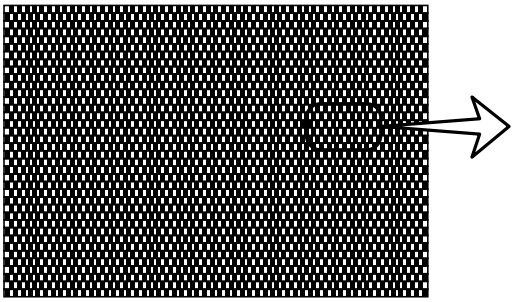

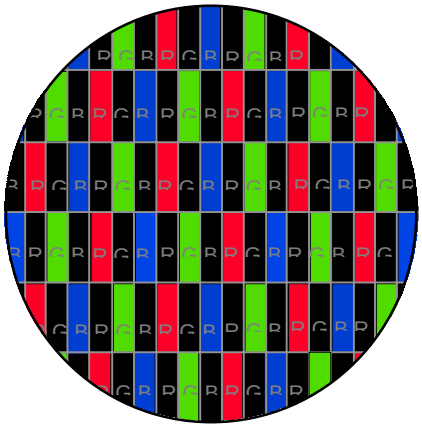

(4) Measurement Conditions

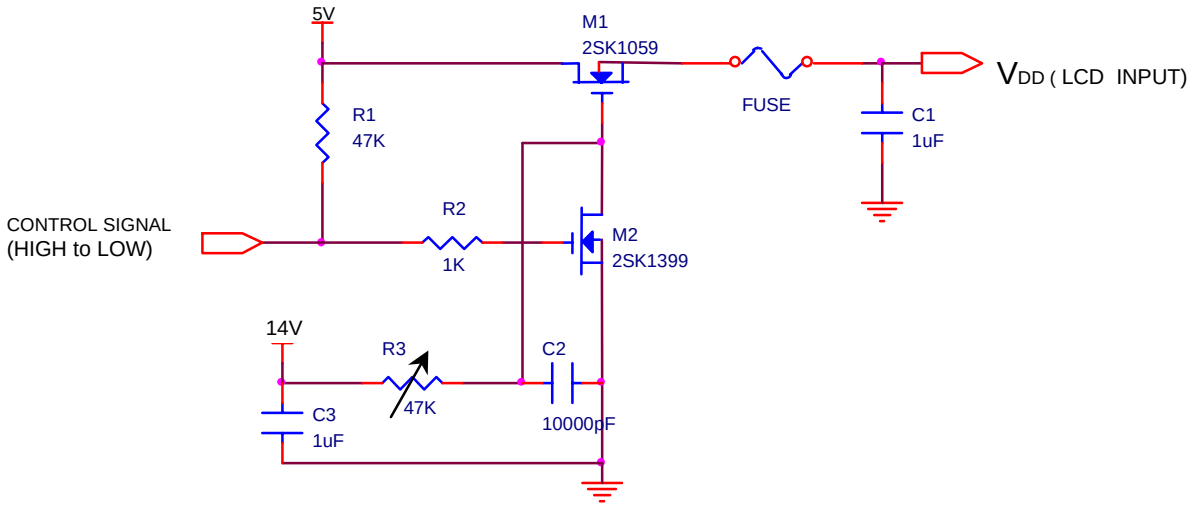

Note : Control Signal : High(+5V) -->Low(Ground)

All Signal lines to panel except for power 5V : Ground

The rising time of supplied voltage is controlled to 470us by R3 and C2 value.

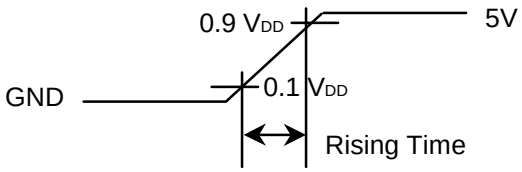

3.2 BACK-LIGHT UNIT

The back-light system is an edge - lighting type with 2 dual CCFTs (Cold Cathode Fluorescent Tube) The characteristics of two dual lamps are shown in the following tables.

Ta=25 ± 2°C

Item	Symbol	Min.	Typ.	Max.	Unit	Note
Lamp Current	I_L	3.0	6.5	7.0	mArms	(1)
Lamp Voltage	V_L	-	650	-	Vrms	
Lamp Frequency	f_L	50	-	60	kHz	(2)
Startup Voltage	Vs	-	-	0℃ : 1,800 25℃: 1,500	Vrms	(3)

Note) The waveform of the inverter output voltage must be area symmetric and the design of the inverter must have specifications for the modularized lamp.

The performance of the back-light, for example life time or brightness, is much influenced by the characteristics of the DC-AC inverter for the lamp. So all the parameters of an inverter should be carefully designed so as not to produce too much leakage current from high-voltage output of the inverter. When you design or order the inverter, please make sure that a poor lighting caused by the mismatch of the back-light and the inverter(miss lighting, flicker, etc.) never occur. When you confirm it, the module should be operated in the same condition as it is installed in your instrument.

Note (1) Lamp current is measured with current meter for high frequency as shown below. Refer to the block diagram of the back-light unit in the next page for more information. Specified values are for a single lamp.

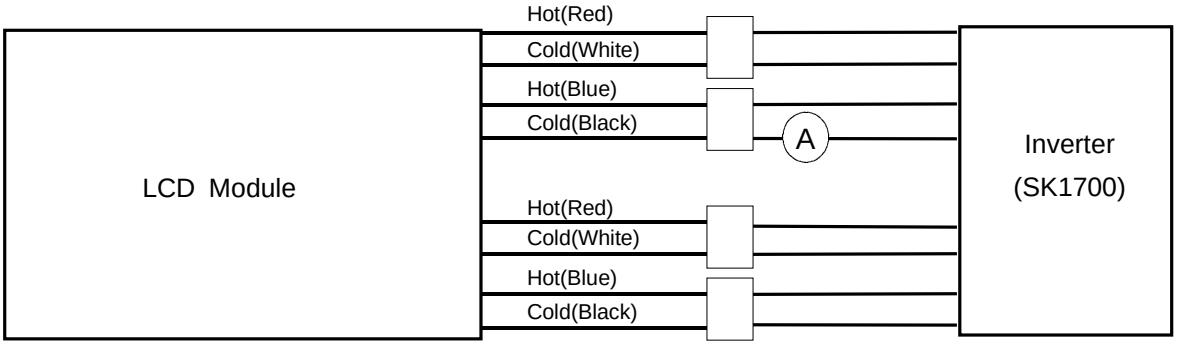

(2) Lamp frequency may produce interference with horizontal synchronous frequency which may cause line flow on the display. Therefore lamp frequency should be detached from the horizontal synchronous frequency and its harmonics as far as possible in order to avoid interference.

(3) If an inverter has shutdown function it should keep its output for more than 1 second even if the lamp connector open. Otherwise the lamps may not to be turned on.

(4) Because the inverter uses high voltage, please disconnect it from the power before assembling or disassembling.

4. Block Diagram

4.1 TFT LCD MODULE

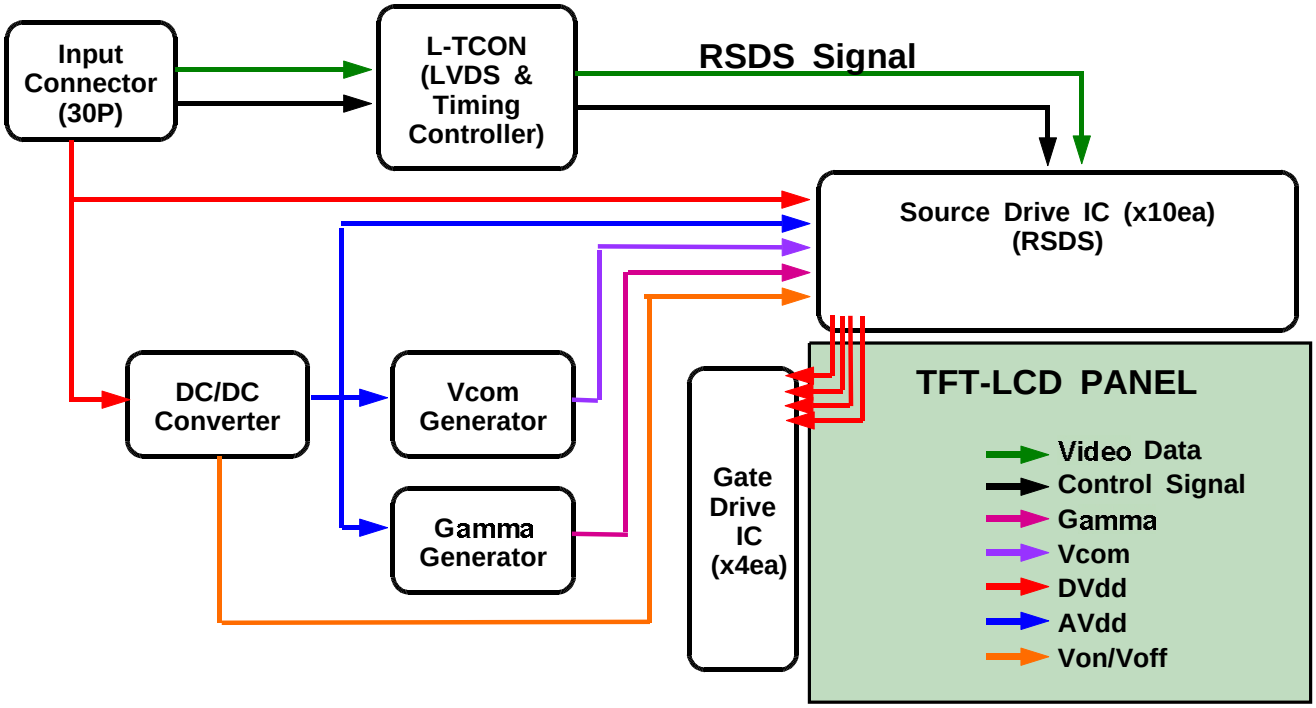

4.2 BACK-LIGHT UNIT

Connector : JST BHSR-02VS-1 or equivalent

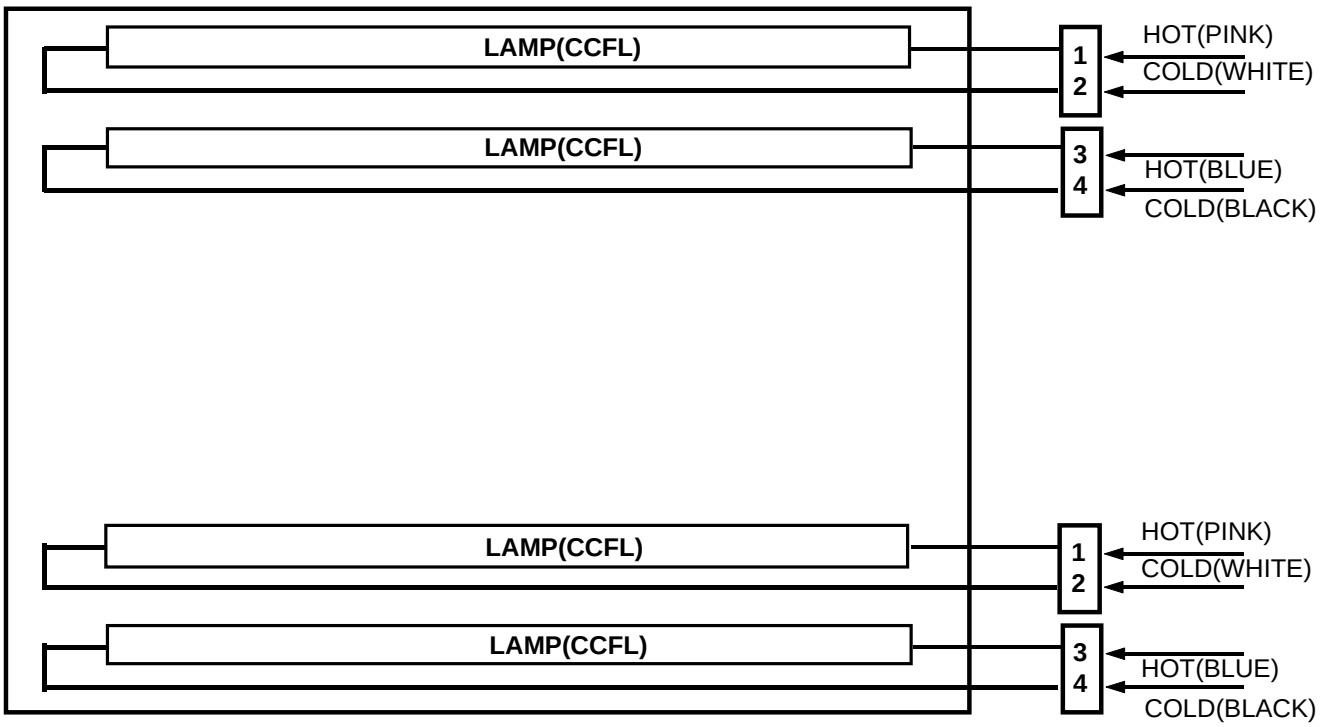

5. Input Terminal Pin Assignment

5.1. Input Signal & Power (Connector : FI-XB30SSL-HF15 or equivalent)

PIN NO	SYMBOL	FUNCTION
1	V_{DD}	Power Supply : +5V
2	V_{DD}	
3	V_{DD}	
4	NC	No Connection
5	NC	No Connection
6	NC	No Connection
7	GND	Power Ground
8	RXE3+	Positive Transmission Data of Pixel 3 (EVEN data)
9	RXE3-	Negative Transmission Data of Pixel 3 (EVEN data)
10	RXEC+	Positive Sampling Clock (EVEN data)
11	RXEC-	Negative Sampling Clock (EVEN data)
12	RXE2+	Positive Transmission Data of Pixel 2 (EVEN data)
13	RXE2-	Negative Transmission Data of Pixel 2 (EVEN data)
14	GND	Power Ground
15	RXE1+	Positive Transmission Data of Pixel 1 (EVEN data)
16	RXE1-	Negative Transmission Data of Pixel 1 (EVEN data)
17	GND	Power Ground
18	RXE0+	Positive Transmission Data of Pixel 0 (EVEN data)
19	RXE0-	Negative Transmission Data of Pixel 0 (EVEN data)
20	RXO3+	Positive Transmission Data of Pixel 3 (ODD data)
21	RXO3-	Negative Transmission Data of Pixel 3 (ODD data)
22	RXOC+	Positive Sampling Clock (ODD data)
23	RXOC-	Negative Sampling Clock (ODD data)
24	GND	Power Ground
25	RXO2+	Positive Transmission Data of Pixel 2 (ODD data)
26	RXO2-	Negative Transmission Data of Pixel 2 (ODD data)
27	RXO1+	Positive Transmission Data of Pixel 1 (ODD data)
28	RXO1-	Negative Transmission Data of Pixel 1 (ODD data)
29	RXO0+	Positive Transmission Data of Pixel 0 (ODD data)
30	RXO0-	Negative Transmission Data of Pixel 0 (ODD data)

Note) Start from Right side

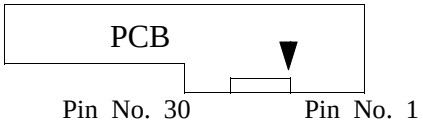

5.2 LVDS Interface

5.2.1 Odd pixel data (1st pixel data)

1st LVDS Transmitter (***DS90C383, DS90C385***) Signal Interface						
Device Input Pin		Device Input Signal		Output Signal	To LTM170EU Interface (CN101)	
No	Symbol	Symbol	Function		Terminal	Symbol
51	TXIN0	RO0	Red Odd Pixel Data (LSB)	TXOUT0- TXOUT0+	No. 1 No. 2	RXO0- RXO0+
52	TXIN1	RO1	Red Odd Pixel Data			
54	TXIN2	RO2	Red Odd Pixel Data			
55	TXIN3	RO3	Red Odd Pixel Data			
56	TXIN4	RO4	Red Odd Pixel Data			
2	TXIN5	RO7	Red Odd Pixel Data (MSB)	TXOUT3- TXOUT3+	No. 10 No. 11	RXO3- RXO3+
3	TXIN6	RO5	Red Odd Pixel Data	TXOUT0- TXOUT0+	No. 1 No. 2	RXO0- RXO0+
4	TXIN7	GO0	Green Odd Pixel Data (LSB)			
6	TXIN8	GO1	Green Odd Pixel Data	TXOUT1- TXOUT1+	No. 3 No. 4	RXO1- RXO1+
7	TXIN9	GO2	Green Odd Pixel Data			
8	TXIN10	GO6	Green Odd Pixel Data	TXOUT3- TXOUT3+	No. 10 No. 11	RXO3- RXO3+
10	TXIN11	GO7	Green Odd Pixel Data (MSB)			
11	TXIN12	GO3	Green Odd Pixel Data	TXOUT1- TXOUT1+	No. 3 No. 4	RXO1- RXO1+
12	TXIN13	GO4	Green Odd Pixel Data			
14	TXIN14	GO5	Green Odd Pixel Data			
15	TXIN15	BO0	Blue Odd Pixel Data (LSB)			
16	TXIN16	BO6	Blue Odd Pixel Data	TXOUT3- TXOUT3+	No. 10 No. 11	RXO3- RXO3+
18	TXIN17	BO7	Blue Odd Pixel Data (MSB)			
19	TXIN18	BO1	Blue Odd Pixel Data	TXOUT1- TXOUT1+	No. 3 No. 4	RXO1- RXO1+
20	TXIN19	BO2	Blue Odd Pixel Data	TXOUT2- TXOUT2+	No. 5 No. 6	RXO2- RXO2+
22	TXIN20	BO3	Blue Odd Pixel Data			
23	TXIN21	BO4	Blue Odd Pixel Data			
24	TXIN22	BO5	Blue Odd Pixel Data			
50	TXIN27	RO6	Red Odd Pixel Data	TXOUT3- TXOUT3+	No. 10 No. 11	RXO3- RXO3+

5.2.2 Even pixel data (2nd pixel data)

2nd LVDS Transmitter (***DS90C383, DS90C385***) Signal Interface						
Device Input Pin		Device Input Signal		Output Signal	To LTM170EU Interface (CN101)	
No	Symbol	Symbol	Function		Terminal	Symbol
51	TXIN0	RE0	Red Even Pixel Data (LSB)	TXOUT0- TXOUT0+	No. 12 No. 13	RXE0- RXE0+
52	TXIN1	RE1	Red Even Pixel Data			
54	TXIN2	RE2	Red Even Pixel Data			
55	TXIN3	RE3	Red Even Pixel Data			
56	TXIN4	RE4	Red Even Pixel Data			
2	TXIN5	RE7	Red Even Pixel Data (MSB)	TXOUT3- TXOUT3+	No. 22 No. 23	RXE3- RXE3+
3	TXIN6	RE5	Red Even Pixel Data	TXOUT0- TXOUT0+	No. 12 No. 13	RXE0- RXE0+
4	TXIN7	GE0	Green Even Pixel Data (LSB)			
6	TXIN8	GE1	Green Even Pixel Data	TXOUT1- TXOUT1+	No. 15 No. 16	RXE1- RXE1+
7	TXIN9	GE2	Green Even Pixel Data			
8	TXIN10	GE6	Green Even Pixel Data	TXOUT3- TXOUT3+	No. 22 No. 23	RXE3- RXE3+
10	TXIN11	GE7	Green Even Pixel Data (MSB)			
11	TXIN12	GE3	Green Even Pixel Data	TXOUT1- TXOUT1+	No. 15 No. 16	RXE1- RXE1+
12	TXIN13	GE4	Green Even Pixel Data			
14	TXIN14	GE5	Green Even Pixel Data			
15	TXIN15	BE0	Blue Even Pixel Data (LSB)			
16	TXIN16	BE6	Blue Even Pixel Data	TXOUT3- TXOUT3+	No. 22 No. 23	RXE3- RXE3+
18	TXIN17	BE7	Blue Even Pixel Data (MSB)			
19	TXIN18	BE1	Blue Even Pixel Data	TXOUT1- TXOUT1+	No. 15 No. 16	RXE1- RXE1+
20	TXIN19	BE2	Blue Even Pixel Data	TXOUT2- TXOUT2+	No. 18 No. 19	RXE2- RXE2+
22	TXIN20	BE3	Blue Even Pixel Data			
23	TXIN21	BE4	Blue Even Pixel Data			
24	TXIN22	BE5	Blue Even Pixel Data			
50	TXIN27	RE6	Red Even Pixel Data	TXOUT3- TXOUT3+	No. 22 No. 23	RXE3- RXE3+

5.3 BACK-LIGHT UNIT

	Pin No.	Input	Color	Function
Upper	1	Hot1	Pink	High Voltage
	2	Cold1	White	Ground
	3	Hot2	Blue	High Voltage
	4	Cold2	Black	Ground
Lower	1	Hot1	Pink	High Voltage
	2	Cold1	White	Ground
	3	Hot2	Blue	High Voltage
	4	Cold2	Black	Ground
	Connector Part No.	JST BHSR-02VS-1 or equivalent		

以上内容仅为本文档的试下载部分，为可阅读页数的一半内容。如要下载或阅读全文，请访问：https://d.book118.com/418022065040006102