i Contents

ii Record of Revision

1.0 Handling Precautions

2.0 General Description

2.1 Display Characteristics
2.2 Functional Block Diagram
2.3 Optical Characteristics
2.4 Pixel format image

3.0 Electrical characteristics

3.1 Absolute Maximum Ratings
3.2 Connectors
3.3 Signal Pin
3.4 Signal Description
3.5 Signal Electrical Characteristics
3.6 Interface Timing
3.6.1 Timing Characteristics
3.6.2 Timing Definition
3.7 Power Consumption
3.8 Power ON/OFF Sequence

4.0 Backlight Characteristics

4.1 Signal for Lamp connector
4.2 Parameter guide line for CCFL Inverter

5.0 Vibration, shock and drop

5.1 Vibration and shock
5.2 Drop test

6.0 Environment

6.1 Temperature and humidity
6.1.1 Operating conditions
6.1.2 Shipping conditions
6.2 Atmospheric pressure
6.3 Thermal shock

7.0 Reliability

7.1 Failure criteria
7.2 Failure rate
7.2.1 Usage
7.2.2 Components de-rating
7.3 CCFL life
7.4 ON/OFF cycle

8.0 Safety

8.1 Sharp edge requirement
8.2 Material
8.2.1 Toxicity
8.2.2 Flammability
8.3 Capacitors
8.4 Hazardous voltage

9.0 Other requirements

9.1 Smoke free design
9.2 National test lab requirement

(C) Copyright AU Optronics, Inc.
Dec, 2003 All Rights Reserved.
No Reproduction and Redistribution Allowed.

ii Record of Revision

Version and Date	Page	Old description	New Description	Remark
0.1 2003/12/01	All	First Edition for Customer	All	

1.0 Handling Precautions

1) Since front polarizer is easily damaged, pay attention not to scratch it.

2) Be sure to turn off power supply when inserting or disconnecting from input connector.

3) Wipe off water drop immediately. Long contact with water may cause discoloration or spots.

4) When the panel surface is soiled, wipe it with absorbent cotton or other soft cloth.

5) Since the panel is made of glass, it may break or crack if dropped or bumped on hard surface.

6) Since CMOS LSI is used in this module, take care of static electricity and insure human earth when handling.

7) Do not open nor modify the Module Assembly.

8) Do not press the reflector sheet at the back of the module to any directions.

9) At the insertion or removal of the Signal Interface Connector, be sure not to rotate nor tilt the Interface Connector of the TFT-LCD module.

10) After installation of the TFT-LCD module into an enclosure (LCD monitor housing, for example), do not twist nor bend the TFT -LCD module even momentary. At designing the enclosure, it should be taken into consideration that no bending/twisting forces are applied to the TFT -LCD module from outside. Otherwise the TFT -LCD module may be damaged.

(C) Copyright AU Optronics, Inc.
Dec, 2003 All Rights Reserved.
No Reproduction and Redistribution Allowed.

2.0 General Description

This specification applies to the 20.1 inch Color TFT-LCD Module M201UN02 v.3.

The display supports the UXGA (1600(H) x 1200(V)) screen format and 16.7M colors (RGB 8-bits data).

All input signals are 2 Channel LVDS interface compatible.

This module does not contain an inverter card for backlight.

2.1 Display Characteristics

The following items are characteristics summary on the table under 25 ℃ condition:

ITEMS	Unit	SPECIFICATIONS
Screen Diagonal	[mm]	510(20.1")
Active Area	[mm]	408.0 (H) x 306.0 (V)
Pixels H x V		1600(x3) x 1200
Pixel Pitch	[mm]	0.255 (per one triad) x 0.255
Pixel Arrangement		R.G.B. Vertical Stripe
Display Mode		Normally Black
White Luminance	[cd/m^2]	250 cd/m2 (Typ)
Contrast Ratio		700 : 1 (Typ)
Optical Response Time (Gray to Gray)	[msec]	16 (Typ)
Nominal Input Voltage VDD	[Volt]	+5.0 V
Power Consumption (VDD line + CCFL line)	[Watt]	45W(typ.) (w/o Inverter, All white pattern)
Weight	[Grams]	3000 (Typ)
Physical Size	[mm]	432(W) x 331.4(H) x 23.1(D)
Electrical Interface		Even/Odd R/G/B data, 3 sync signal, Clock
Support Color		16.7M colors (RGB 8-bit data)
Temperature Range Operating Storage (Shipping)	 [ºC] [ºC]	 0 to +50 -20 to +60

(C) Copyright AU Optronics, Inc.
Dec, 2003 All Rights Reserved.
No Reproduction and Redistribution Allowed.

2.2 Functional Block Diagram

The following diagram shows the functional block of the 20.1 inches Color TFT-LCD Module:

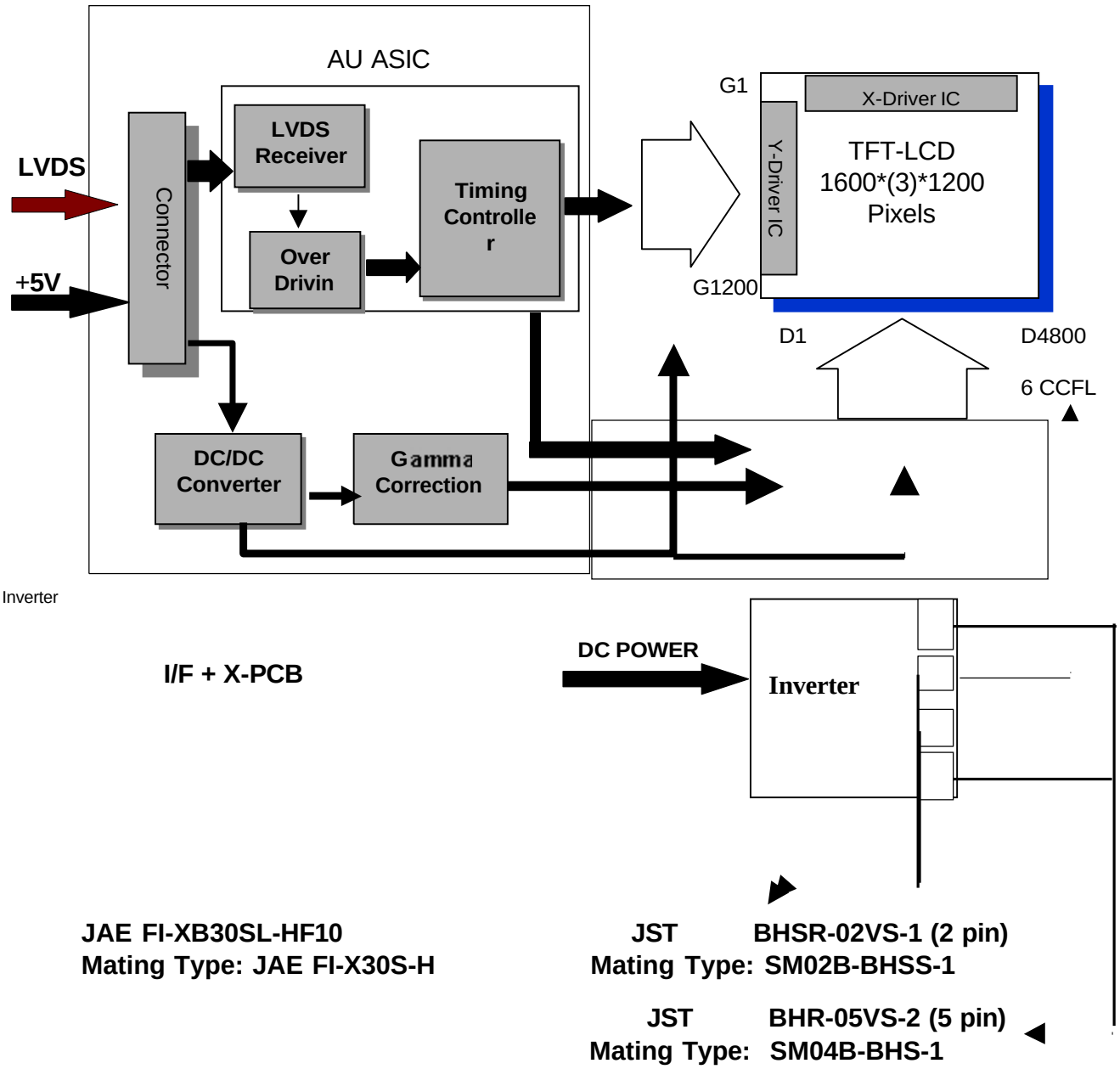

(C) Copyright AU Optronics, Inc.
Dec, 2003 All Rights Reserved.
No Reproduction and Redistribution Allowed.

2.3 Optical Characteristics

The optical characteristics are measured under stable conditions at 25℃ (Room Temperature):

Item	Unit	Conditions	Min.	Typ.	Max.
Viewing Angle	[degree] [degree]	Horizontal (Right) CR = 10 (Left)	75	85 85	- -
	[degree] [degree]	Vertical (Up) CR = 10 (Down)	75	85 85	- -
Contrast ratio		Normal Direction	400	700	
Response Time (Note 1 & 4)	[msec]	Raising Time	-	15	25
	[msec]	Falling Time	-	10	15
	[msec]	Raising + Falling	-	25	40
	[msec]	Gray to Gray	-	16	
Color / Chromaticity Coordinates (CIE)		Red x	0.618	0.648	0.678
		Red y	0.309	0.339	0.369
		Green x	0.259	0.289	0.319
		Green y	0.568	0.598	0.628
		Blue x	0.113	0.143	0.173
		Blue y	0.048	0.078	0.108
Color Coordinates (CIE) White		White x	0.283	0.313	0.343
		White y	0.299	0.329	0.359
White Luminance at CCFL 6.0mA (central point)	[cd/m^2]		200	250	-
Luminance Uniformity (Note 2)	[%]		75	80	-
Crosstalk (in 60Hz) (Note 3)	[%]				1.5

Equipment: Pattern Generator, Power Supply, Digital Voltmeter, Luminance meter (PR 880, BM-5A , BM- 7 , & EZContrast*)
Aperture: 1○with 100cm VD or 2○with 50cm viewing distance
Test Point: Center (ISO point 22)
Environment: < 1 lux

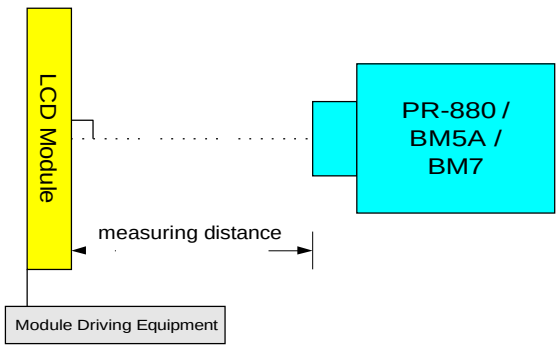

'*' EZ Contrast is different measurement tool with very close viewing distance.

(C) Copyright AU Optronics, Inc.
Dec, 2003 All Rights Reservec.
No Reproduction and Redistribution Allowed.

Note 1: Definition of Response time:

The output signals of photodetector are measured when the input signals are changed from " Black" to " White" (rising time), and from "White" to " Black" (falling time), respectively. The response time is interval between the 10% and 90% of amplitudes. Refer to figure as below.

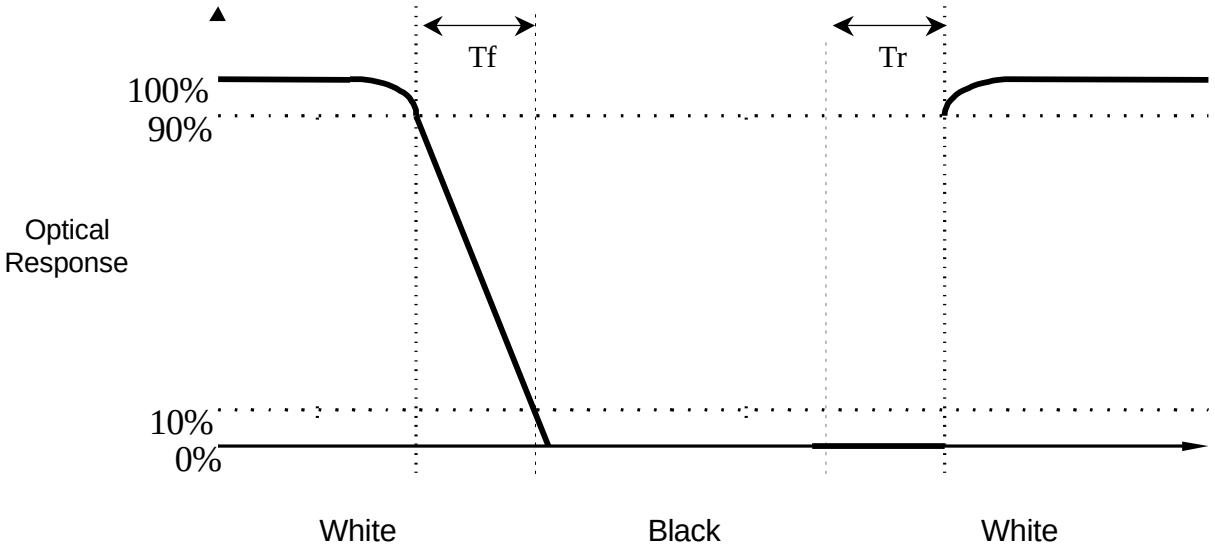

Note 2: Brightness uniformity of these 9 points is defined as below:

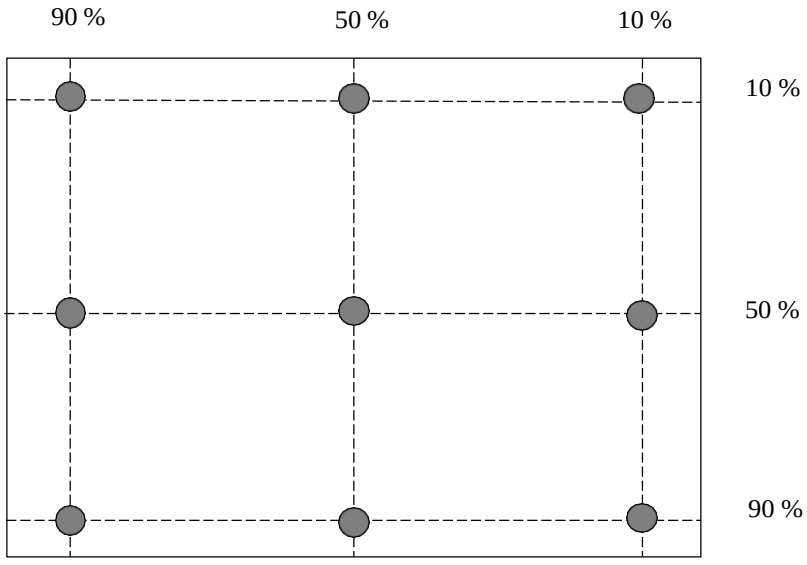

(C) Copyright AU Optronics, Inc.
Dec, 2003 All Rights Reservec.
No Reproduction and Redistribution Allowed.

$$\text{Uniformity} = \frac{\text{Minimum Luminance in 9 Points (1-9)}}{\text{Maximum Luminance in 9 Points (1-9)}}$$

Note 3: Crosstalk is defined as below :

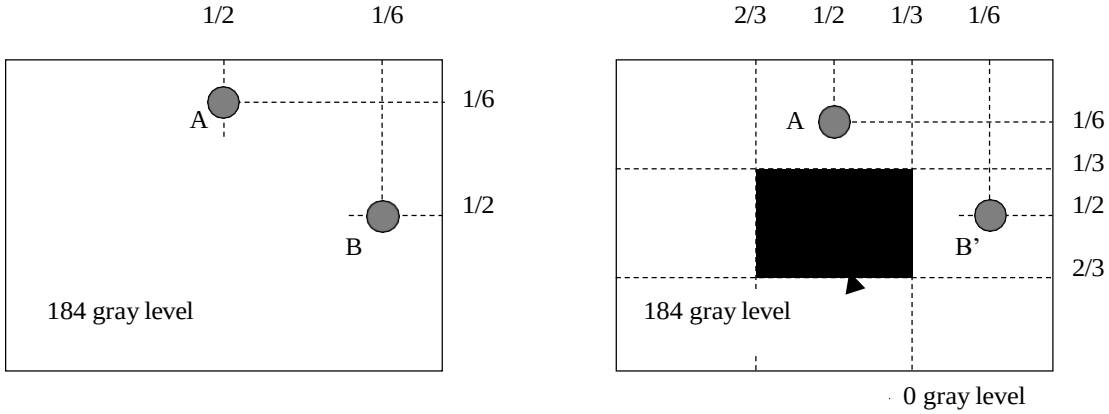

Unit: percentage of dimension of display area

$|L_A - L_{A'}| / L_A \times 100\% = 1.5\%$ max., L_A and L_B are brightness at location A and B

$|L_B - L_{B'}| / L_B \times 100\% = 1.5\%$ max., $L_{A'}$ and $L_{B'}$ are brightness at location A' and B'

Note 4: Over-Drive and Response time:

Algorithm:

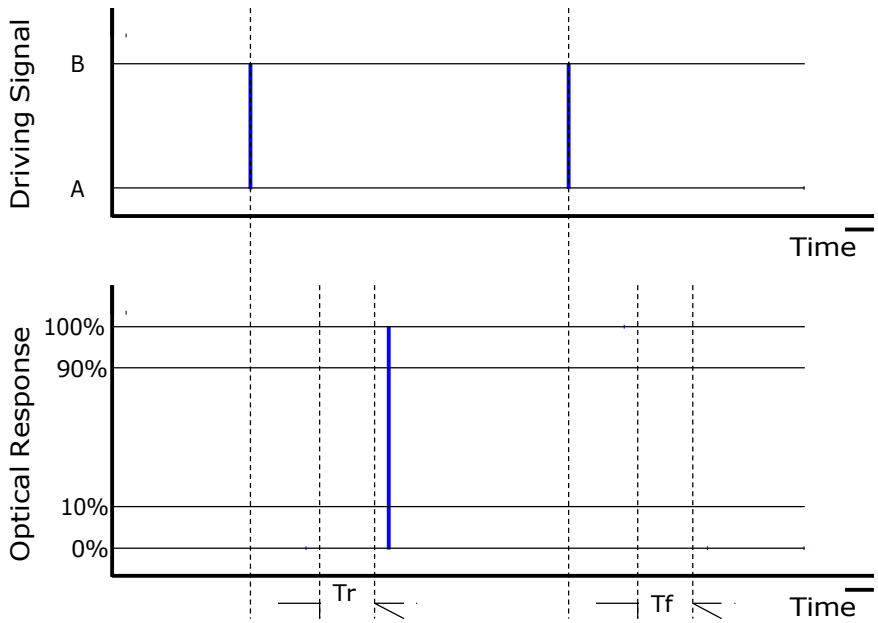

$|\text{Level A - Level B}| \geq 16$ then $T_r \leq 16ms$ & $T_f \leq 16ms$

(C) Copyright AU Optronics, Inc.
Dec, 2003 All Rights Reserved.
No Reproduction and Redistribution Allowed.

以上内容仅为本文档的试下载部分，为可阅读页数的一半内容。如要下载或阅读全文，请访问：https://d.book118.com/507116035154006040