

MIRANTIS

OpenStack with Open vSwitch

OpenStack overlay networking with Open vSwitch

tr

Copyright © 2018 Mirantis, Inc. All rights reserved

Objectives

- Open vSwitch recap
- DVR in Openstack Neutron

Open vSwitch Recap

What is Open vSwitch

- A production-quality open source virtual multilayer switch released in 2011
- Per VM interface traffic policing, Fine-grained QoS control, and STP (IEEE 802.1D-1998)
- Standard 802.1Q VLAN model with trunking, and multiple tunneling protocols (GRE, VXLAN, IPsec, GRE and VXLAN over IPsec)
- OpenFlow protocol support (including many extensions for virtualization)
- Remote configuration protocol with C and Python bindings
- Kernel and user-space forwarding engine options

Open vSwitch Components

- **ovs-vswitchd**, the daemon that implements the switch, along with a companion Linux kernel module for flow-based switching
- **ovs-vsctl**, utility to query/update ovs-vswitchd config
- **ovs-ofctl,** utility to query/control OpenFlow switches and controllers
- **ovs-appctl**, a utility that sends commands to running OpenvSwitch daemons
- **ovs-dpctl**, tool for configuring the switch kernel module
- **ovsdb-server**, a lightweight database server that ovs-vswitchd queries to obtain its configuration

Open vSwitch Plugin: Bridges

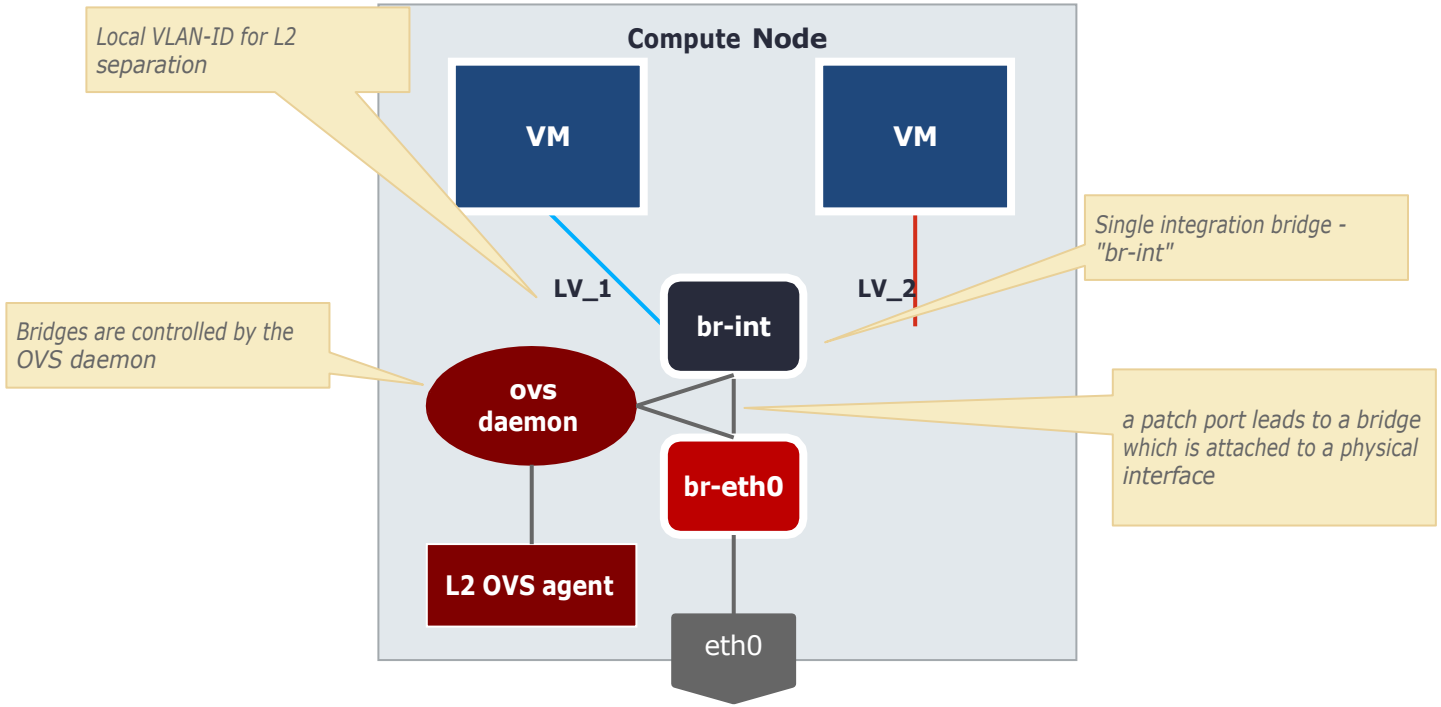

Open vSwitch Plugin: OVS Daemon

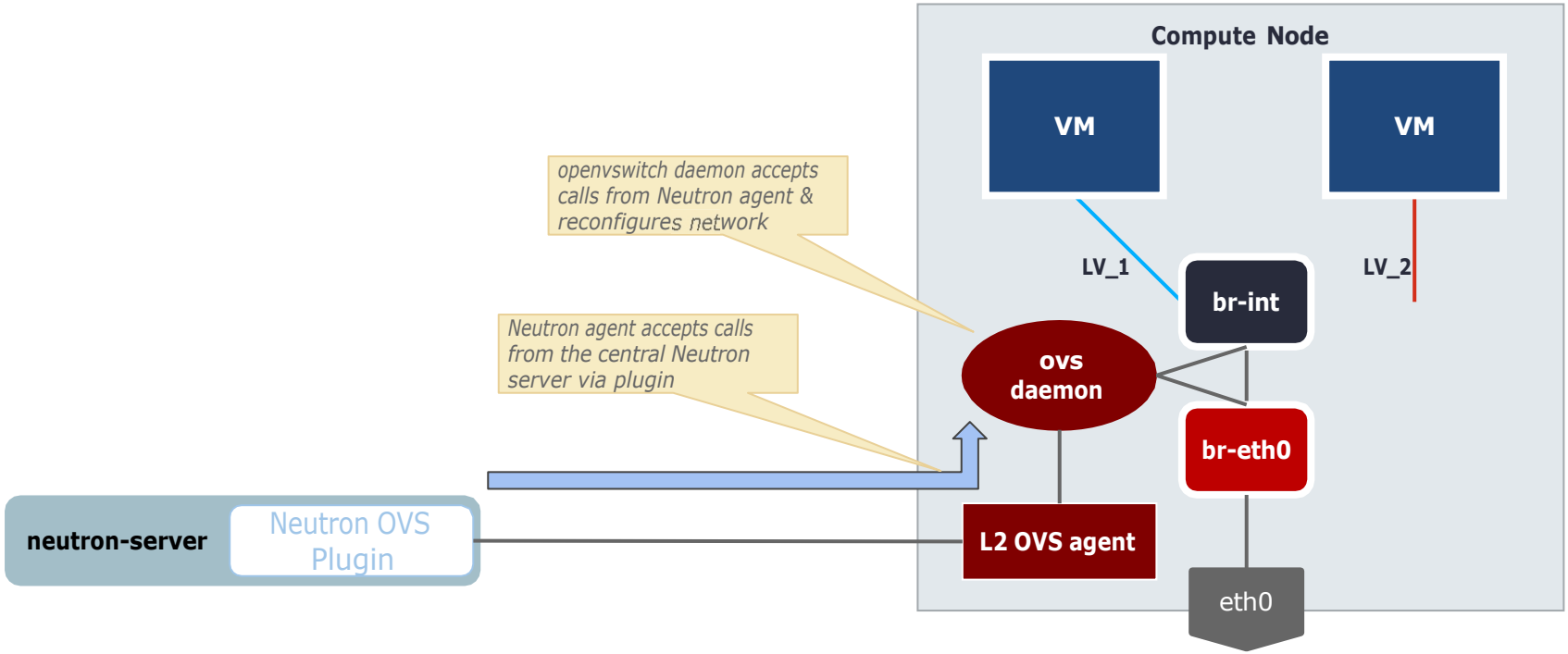

OpenvSwitch Plugin vs. Compute Farm

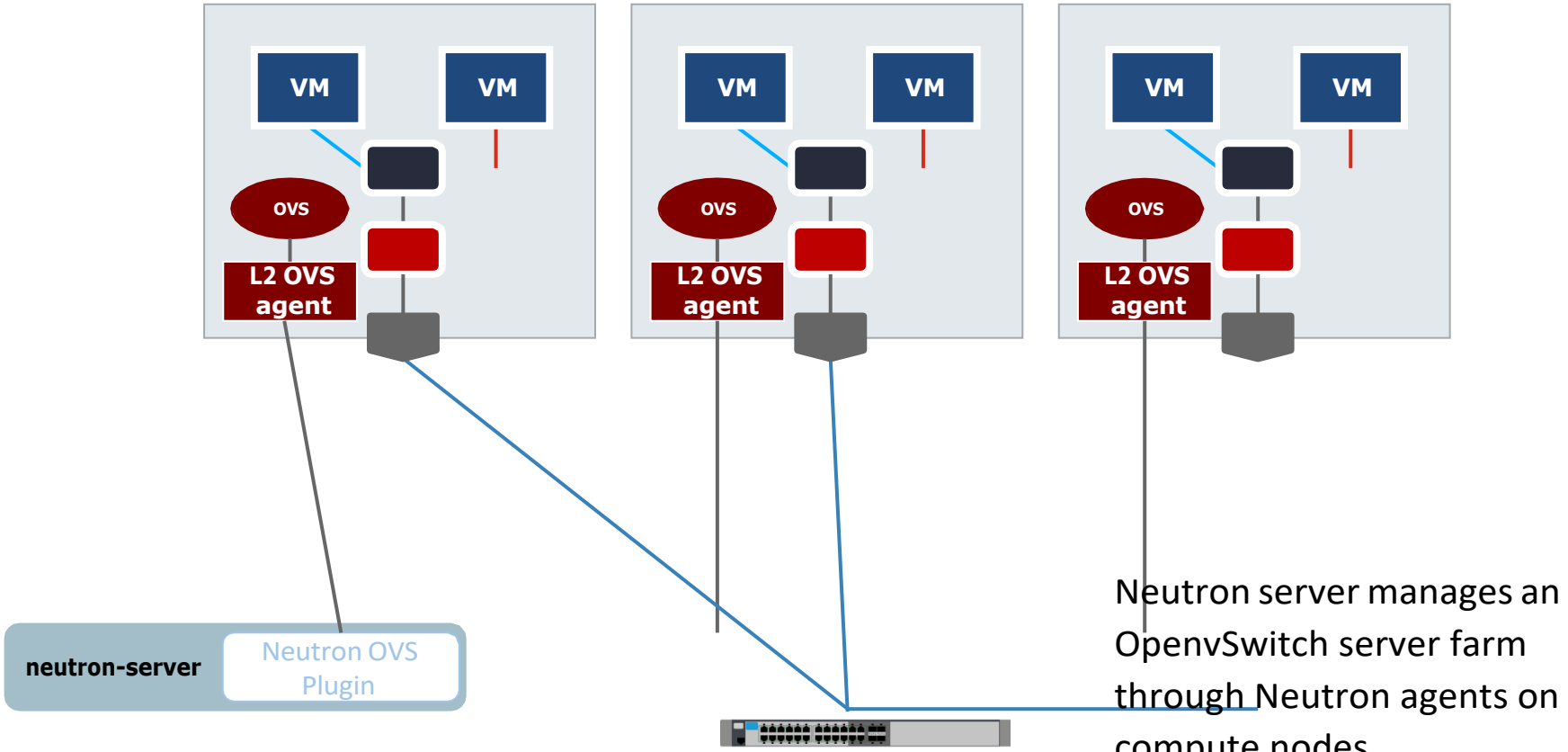

Neutron server manages an OpenvSwitch server farm through Neutron agents on compute nodes

Open vSwitch Plugin: FLAT Mode

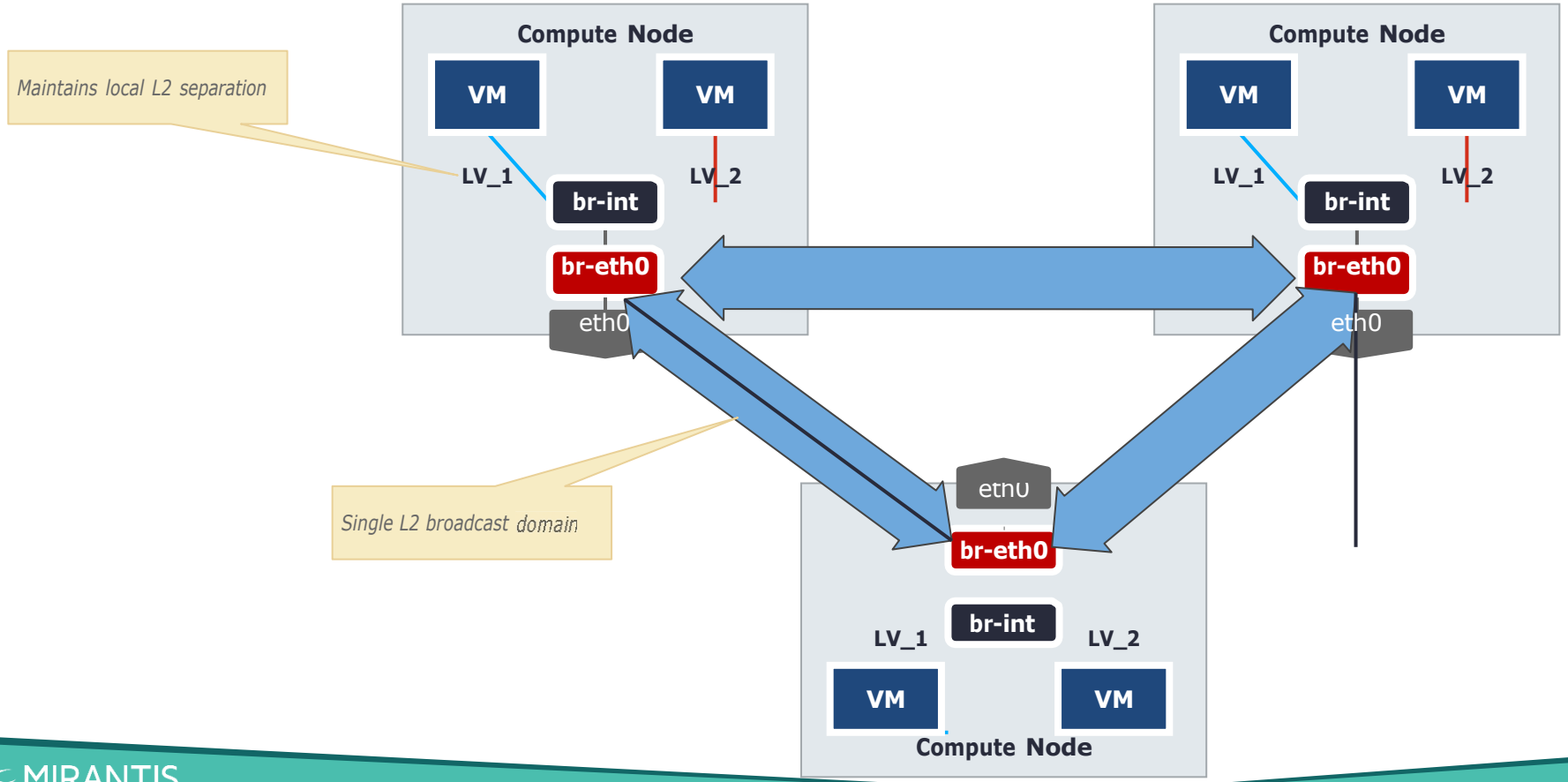

Open vSwitch Plugin: VLAN Mode

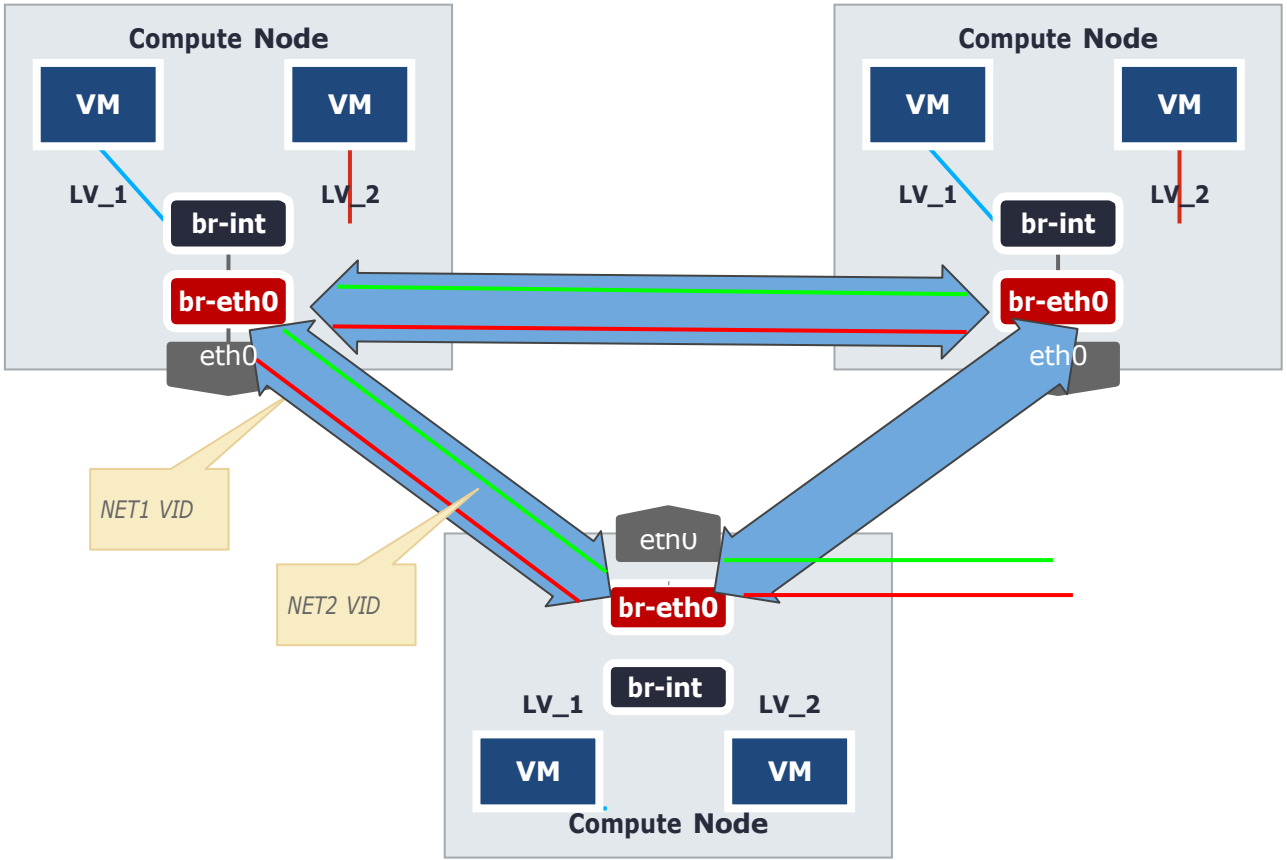

以上内容仅为本文档的试下载部分，为可阅读页数的一半内容。如要下载或阅读全文，请访问：https://d.book118.com/655301024024011110