6 MAINTENANCE

6.1. Replacing Thermal Transfer Film

The unit is capable of printing about 15 copies when the Contrast / Remaining Film Indicator begins to flash. The unit has run out of thermal transfer film and can no longer make copies when the Multi-Copy / Error Indicator flashes " ". Separately available replacement film (KX-BP081) may be purchased from the dealer where you purchased the unit. Thermal transfer film is replaced as follows.

Notes on Replacing Thermal Transfer Film

- **Only use the designated product (KX-BP081 / BP082) from Panasonic as the replacement film. (Note that using another type of replacement film may result in degraded printing quality or damage to the unit.)**
- **Thermal transfer film is disposable. Dispose of used thermal transfer film as "burnable" or "non-recyclable" rubbish.**
- **A negative of the copied image will remain on the thermal transfer film. To protect the security of your information, we recommend cutting up used thermal transfer film with scissors before disposing of it.**

(1) Push down the printer open lever to open the printer door, and remove the film cassette with both hands.

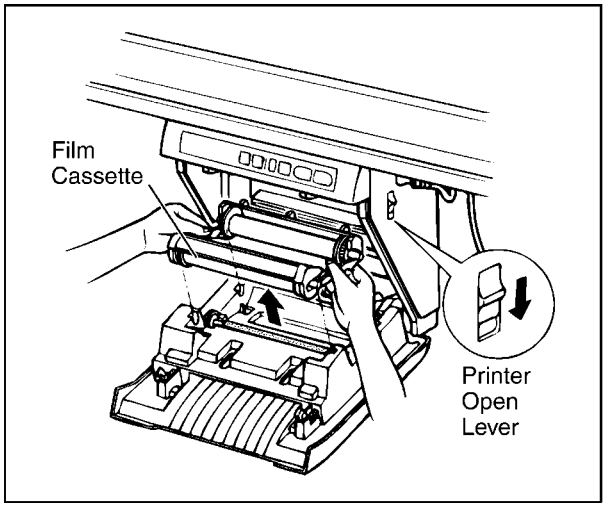

(2) Remove the used thermal transfer film from the film cassette and remove the four gears.

(3) Next, perform steps (3) to (7) in "4.4 Installing Thermal Transfer Film".

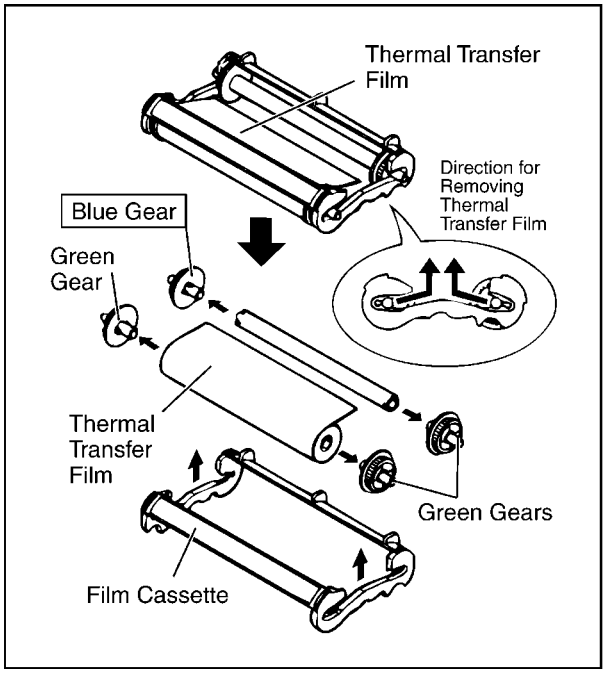

6.2. Paper Jam

Remove paper jams by the following procedure when copy paper does not come out of the output port or when " " flashes on the multi-copy / error display indicator.

(1) Push down the printer open lever to open the printer door.

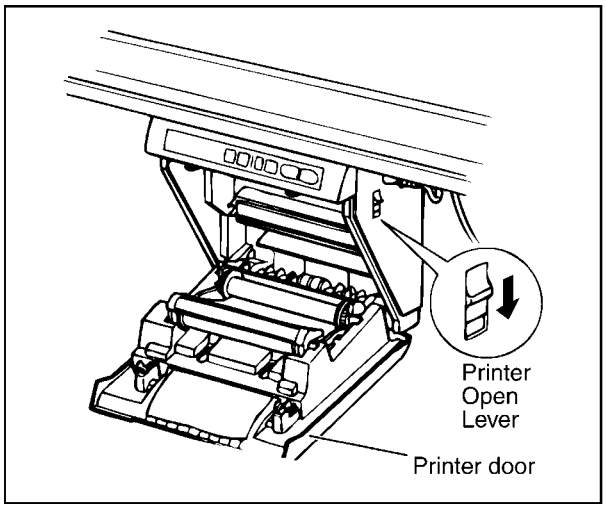

(2) Remove the film cassette with both hands.

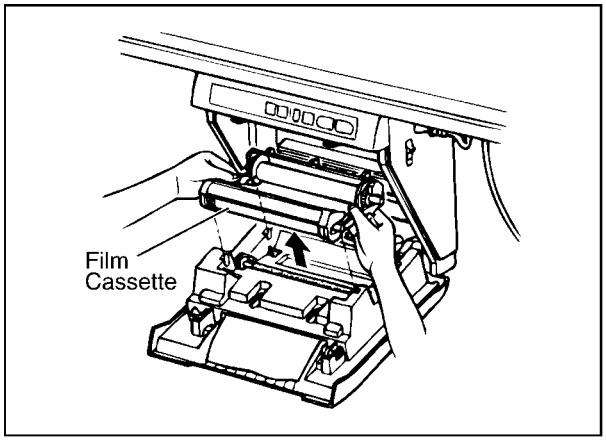

(3) Remove all jammed paper.

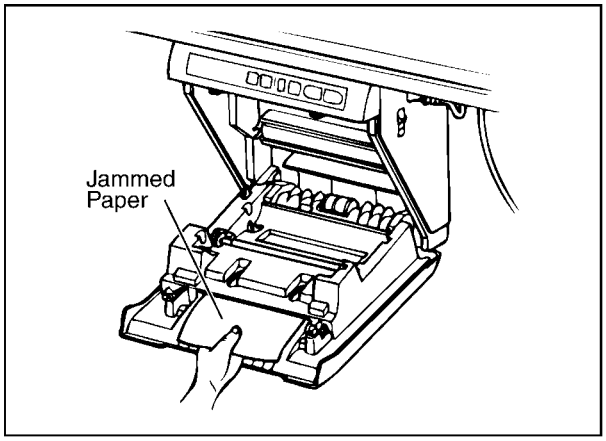

(4) If the thermal transfer film is slack, take up the slack by winding the gears on the label side of the cassette in the direction of the arrows.

Note

The multi-copy / error indicator may flash " " if the thermal transfer film is slack. In addition, the thermal transfer film may wrinkle, and blank (unprinted) spots or black streaks may appear on the copy paper.

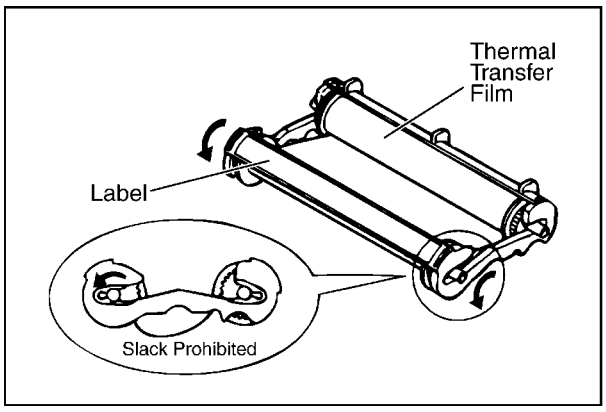

(5) Install the film cassette.

Note

Insert the film cassette into the printer so that the blue gear on the cassette aligns with the blue label on the printer and then insert the gear shafts on both sides of the cassette into the grooves inside the printer.

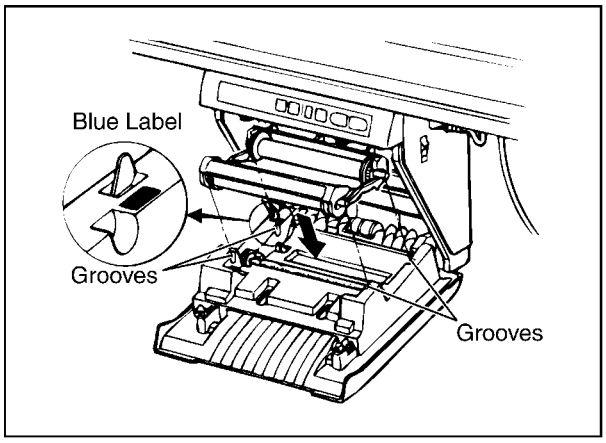

(6) Close the printer door.

Note

- **Securely close the printer with both hands until a click is heard.**
- **The " " flashing on the multi-copy / error indicator will go out.**

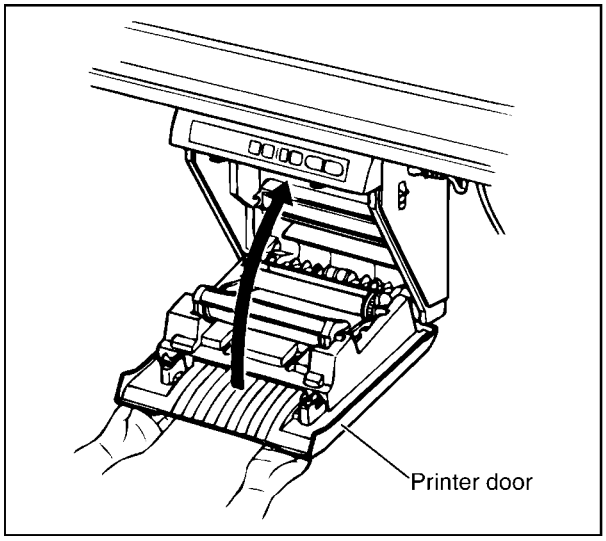

6.2.1. If the flashing “ ” does not go out after the foregoing procedure has been performed

This may indicate that the paper feeder does not work properly. Reload the copy paper by following the steps given below.

(1) Turn the power off and on.

(2) Open the paper cover and remove all copy paper remaining inside the unit’s paper cover.

Note

Note that the copy paper will slightly resist being removed, but may be pulled out without problems.

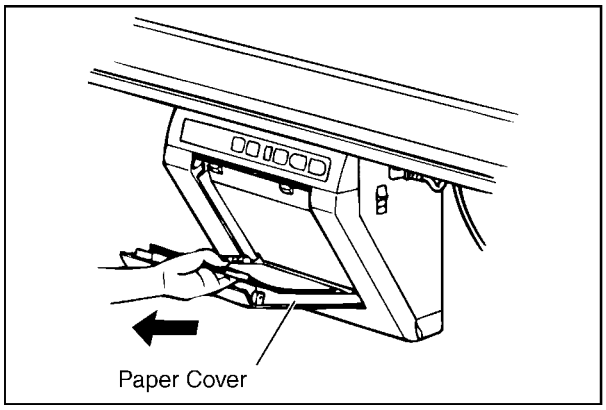

(3) To prevent paper jams such as those caused by multiple sheets feeding, once fan the paper thoroughly, square it, align it with the guide inside, and insert as far as it will go.

Note

Do not stack copy paper in the until than the maximum paper limit indicated by the guide (see figure to the right) as this may result in paper jams. (Note that the unit can hold about 80 sheets of paper having a weight of 80g/m ^{2} (21lbs).)

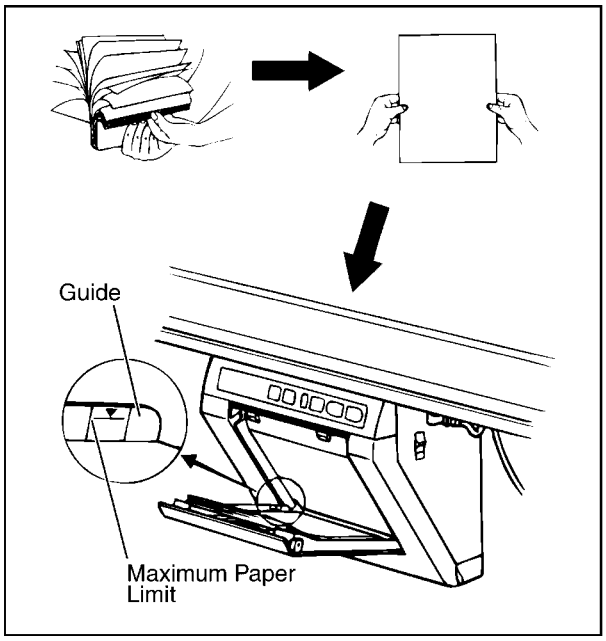

(4) Close the paper cover.

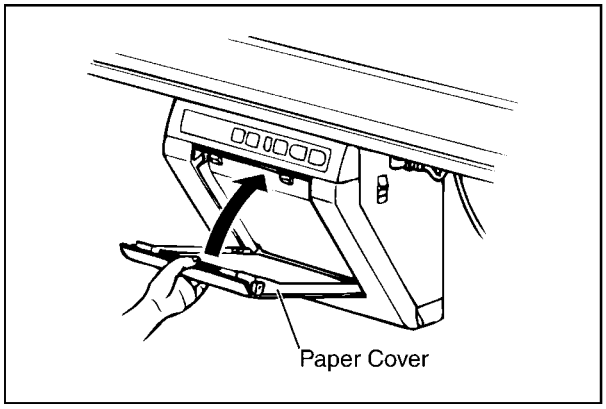

6.3. Daily Care and Maintenance

Always turn off the power switch and film unplug the power plug when cleaning outside and inside the unit.

6.3.1. Cleaning the Screen and the Unit

(1) Gently wipe the screen film and unit with a water-dampened cloth that has been thoroughly wrung.

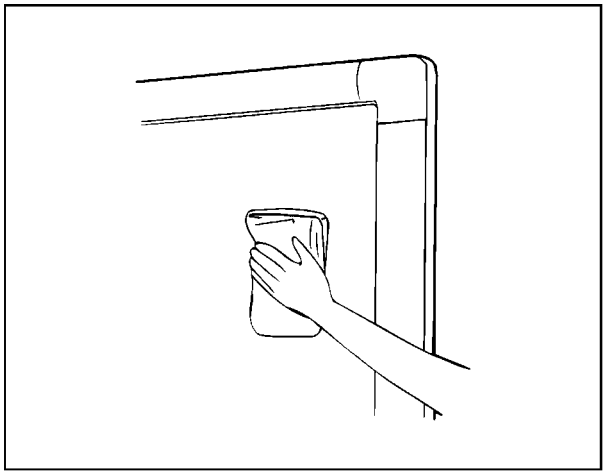

Use a commercially available cleaner for hard-to-clean stains. (SANFORD® EXPO® Whiteboard cleaner etc.)
If you accidently write on the board with an oil-based marker, wipe with a small amount of ethyl alcohol.

Note

- **Do not use thinner, benzine or cleaners containing abrasives as this may result in discoloration.**
- **Do not wipe the screen film with a dry cloth as this may generate a static charge.**

6.3.2. Caring for the Eraser

(1) When the erasing surface of the eraser becomes dirty, hold down the sheet under the top sheet with your finger and peel off the dirty sheet by pulling in the direction of the arrow.

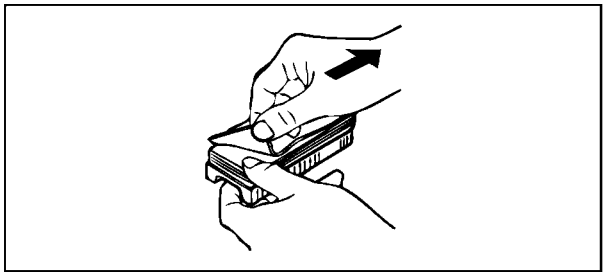

Note

When the eraser becomes thin, make sure that the corners of the eraser do not strike the screen during erasing as this may damage the screen.

6.3.3. Replacing the eraser cloth for the Electronic Eraser

(1) When the erasing surface of the eraser becomes dirty, remove the eraser cloth, pushing it through the hole in the electronic eraser.

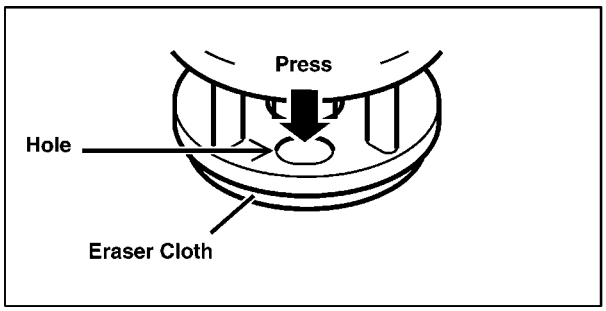

(2) Attach a new eraser cloth by pressing all its edge to the eraser, surely.

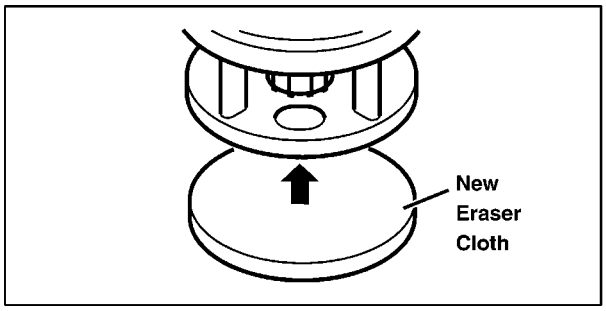

6.3.4. Cleaning the Printer Head, Platen Roller and Feed Roller

Note

- **If black streaks appear on the copy, clean the printer head and the platen roller.**
- **If paper jams occur frequently, clean the feed roller.**

(1) Push down the Printer Open Lever and open the printer door.

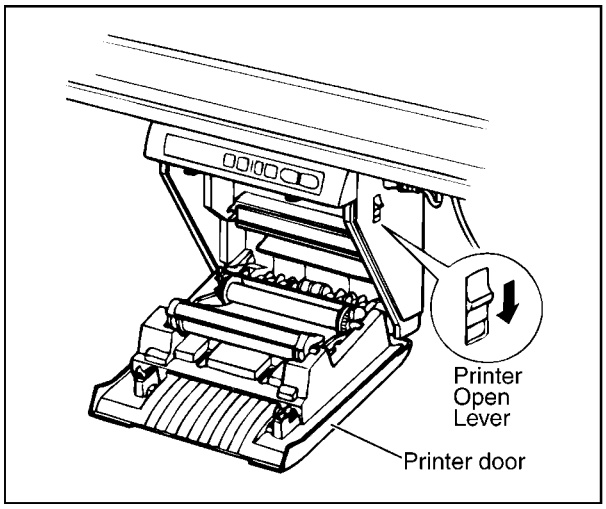

(2) Dampen the tip of a cotton swab in ethyl alcohol and gently wipe the printer head.

Note

Never touch the printer head or the surrounding area with your hands as this may disable copying.

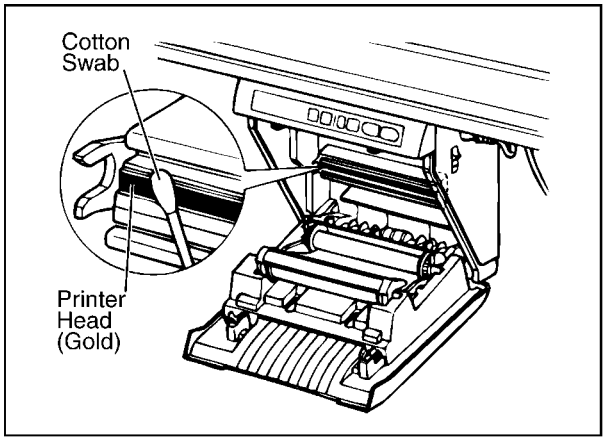

(3) Remove the film cassette with both hands and carefully wipe any dirt or stains off the platen roller and feed roller.

Note

- **For details on removing the film cassette, refer to "6.1 Replacing Thermal Transfer Film".**
- **Dampen a soft cloth with neutral kitchen cleaner diluted in water, wring the cloth thoroughly, and wipe the entire surface of the rollers while rotating them. If this does not remove all dirt, wipe with a cloth dampened with ethyl alcohol.**

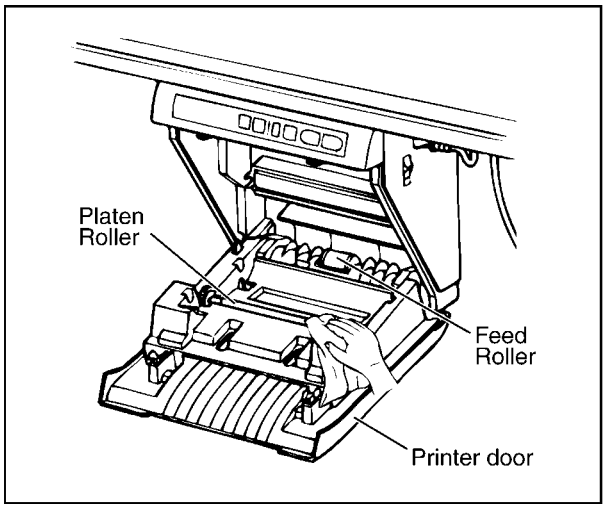

(4) Attach the film cassette in its original position and close the printer door.

Note

- **For detail on attaching the film cassette, refer to 4.4 Installing Thermal Transfer Film.**
- **Close the printer door firmly until a click is heard.**
- **If “ ” is displayed on the multi-copy / error indicator when the power is turned on, this indicates that the film cassette has not been installed properly or that there is slack in the thermal transfer film. Check the condition of the film cassette and for slack in the thermal transfer film.**

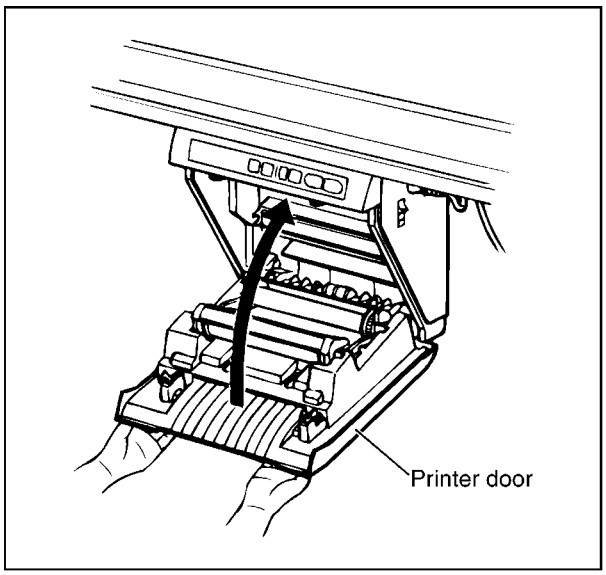

6.3.5. Replacement timing for batteries in Electronic Pen and Electronic Eraser

When “**Low Battery**” is indicated on PC display, insert new batteries in the Electronic Pen or Electronic Eraser.

7 DISASSEMBLY INSTRUCTIONS

7.1. Disassembly Flowchart

The flowchart indicates disassembly items of the Covers, Unit Components and Circuit Board assemblies. When re-assembling, perform the steps in the reverse order unless noted in Re-assembling Notes.

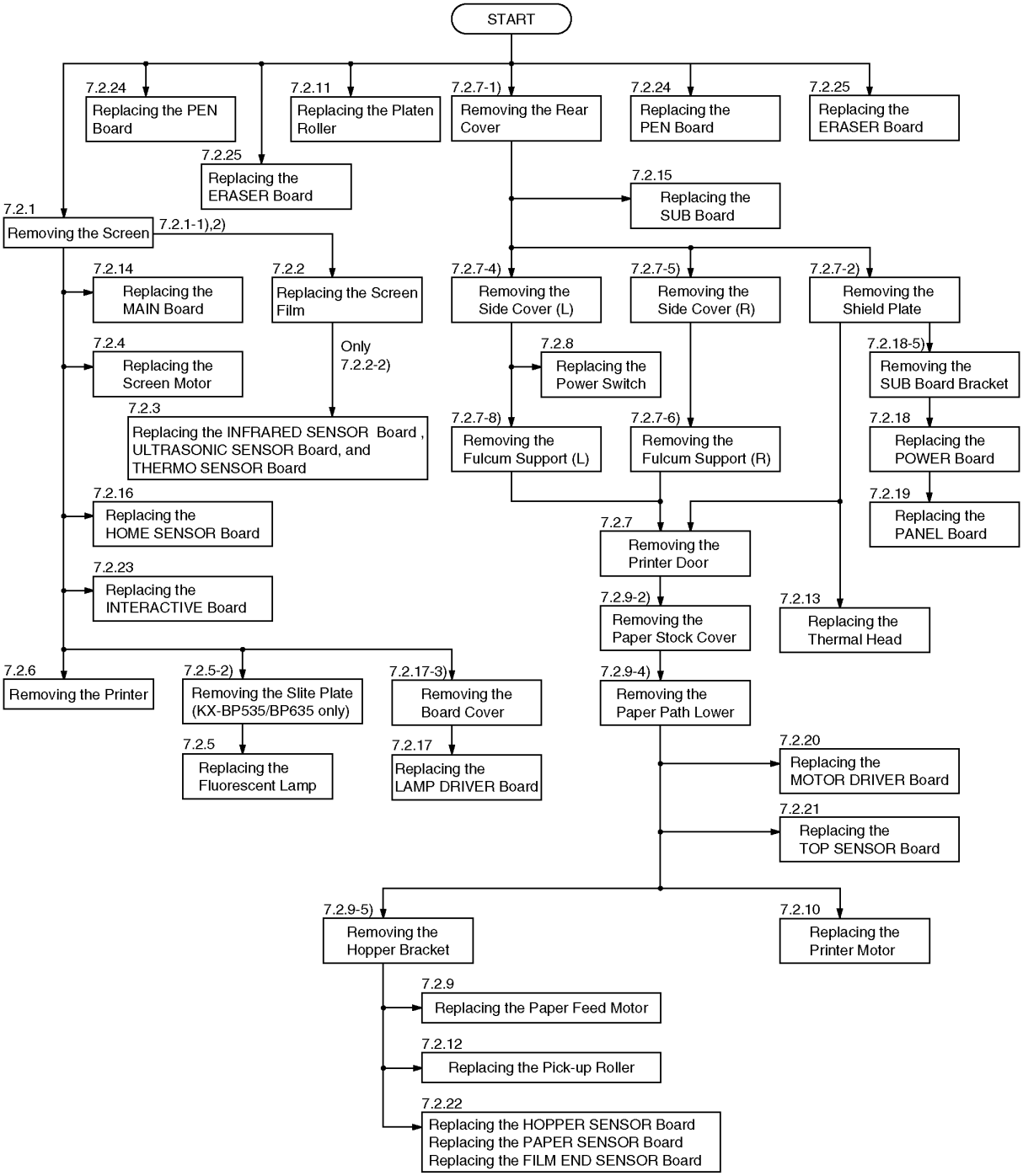

7.2. Disassembly Procedures

7.2.1. Removing the Screen

(1) Remove 2 screws (a) and 2 screws (b).

(2) Remove the lower and upper frame covers according to arrows.

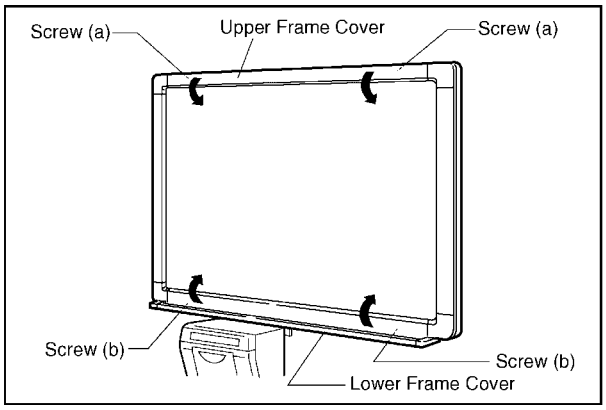

(3) Remove 8 wing bolts.

(4) Slide the two screen unit holders to the left.

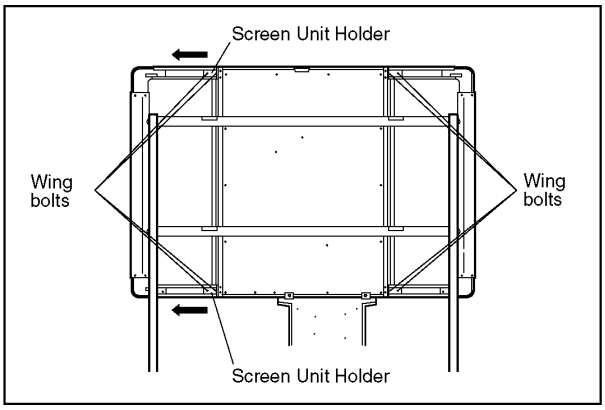

(5) Disconnect 3 connectors.

(6) Remove 2 screws.

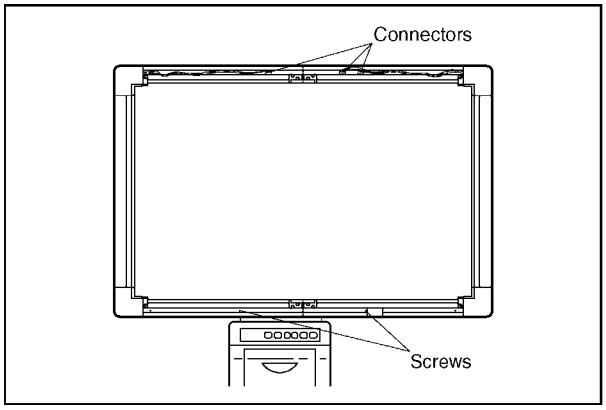

(7) Lift up and remove the screen.

Note

Be careful not to drop the screen.

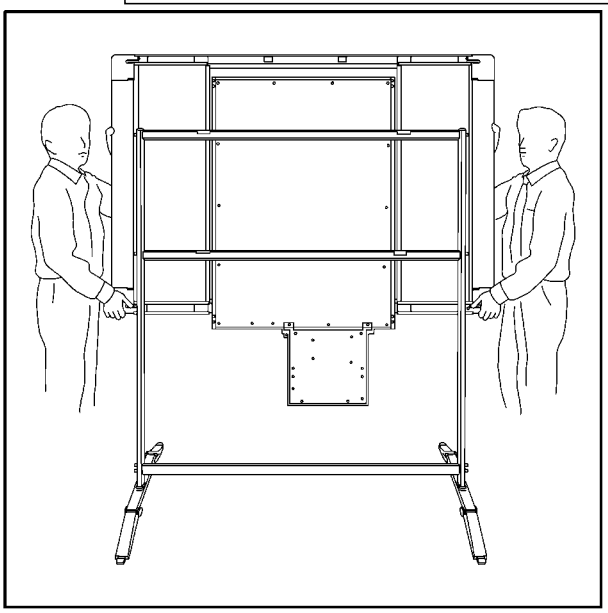

7.2.2. Replacing the Screen Film

(1) Remove the lower and upper frame covers. (See 7.2.1-1), 2))

(2) Disconnect 3 connectors, and remove cables from clampers.

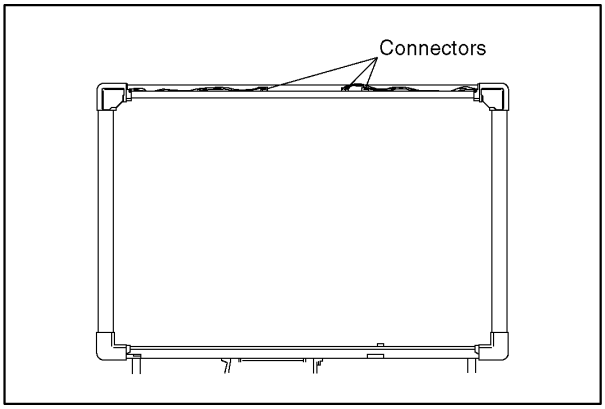

(3) Remove 12 screws and remove the corner frames.

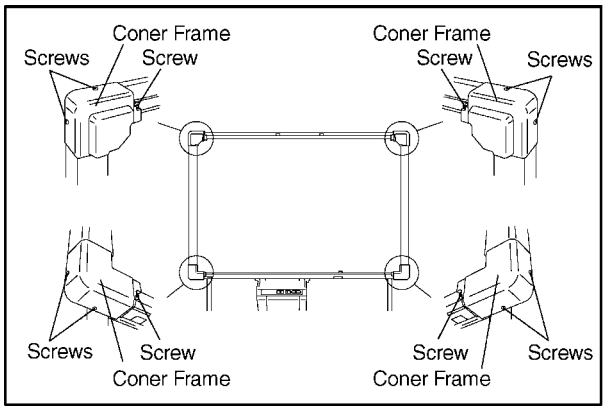

(4) Remove 6 screws and remove side frames.

(5) Remove the screen from CCD unit. (See 7.2.1-3), 4), 6), 7))

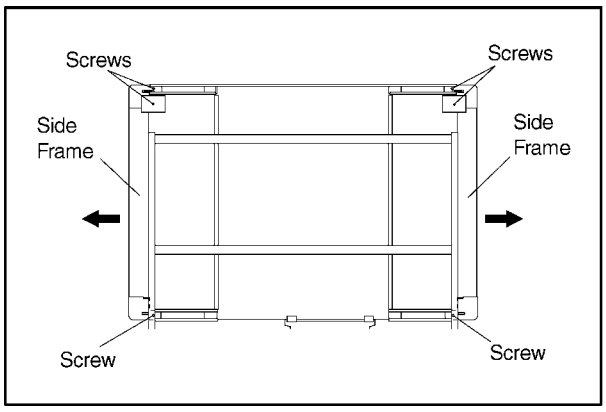

(6) Remove 6 screws (A) and remove the rear covers with the attachments.

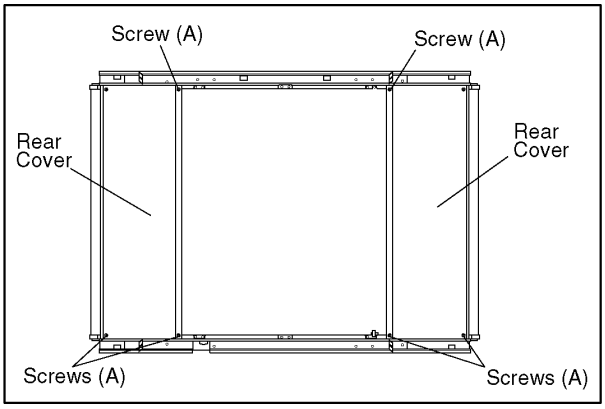

(7) Remove 2 springs and 1 nut.

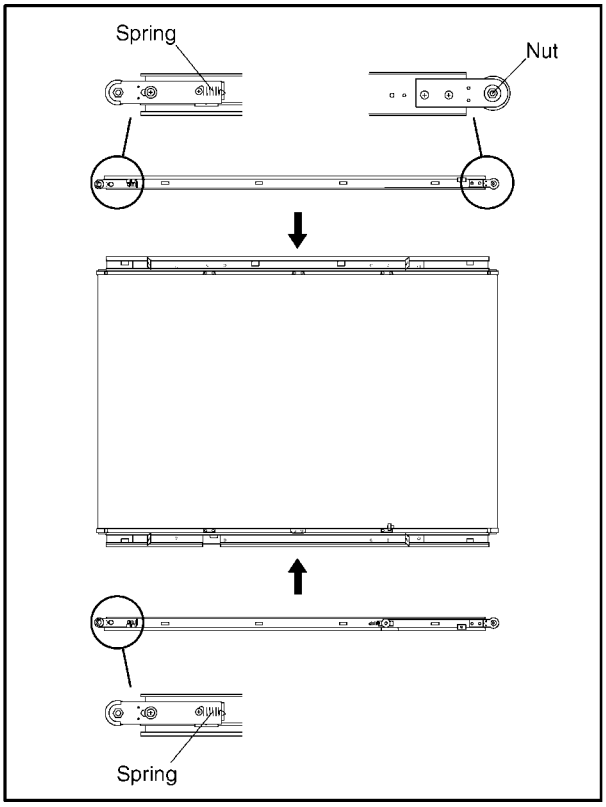

(8) Remove 6 screws (D), and remove screen fitting.

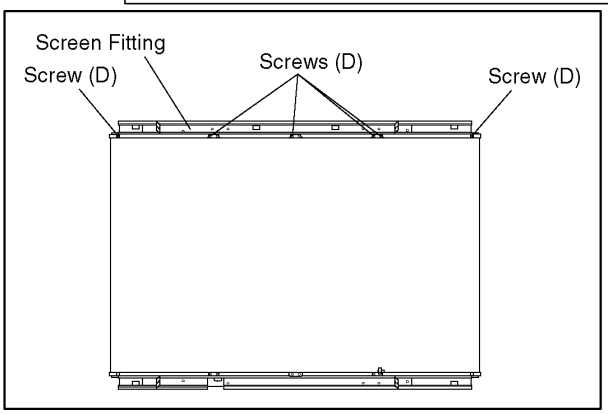

(9) Remove the screen film (pull up to remove).

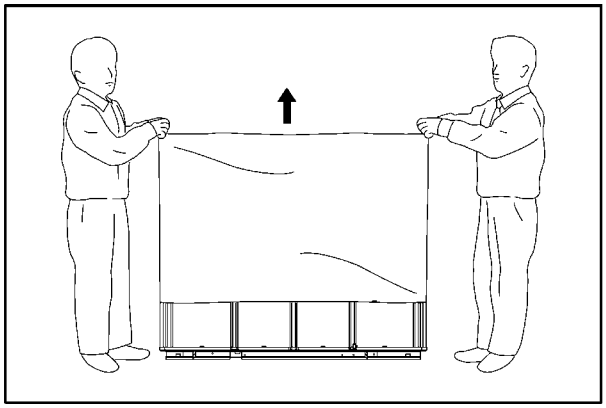

7.2.3. Replacing the INFRARED SENSOR Board, ULTRASONIC SENSOR Board, and THERMO SENSOR Board

(1) Remove upper frame on the screen. (See 7.2.1-1), 2))

(2) Disconnect 3 connectors, and remove cables from clampers.

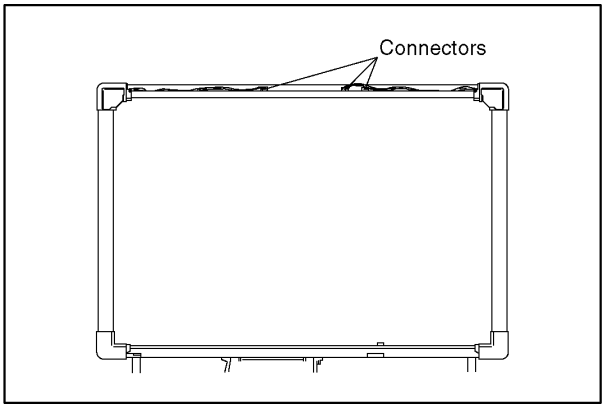

(3) Remove 6 screws and remove the corner frames.

Note

When removing only the THERMO SENSOR Board or thermistor, remove only 3 screws which locate on the right side corner frame.

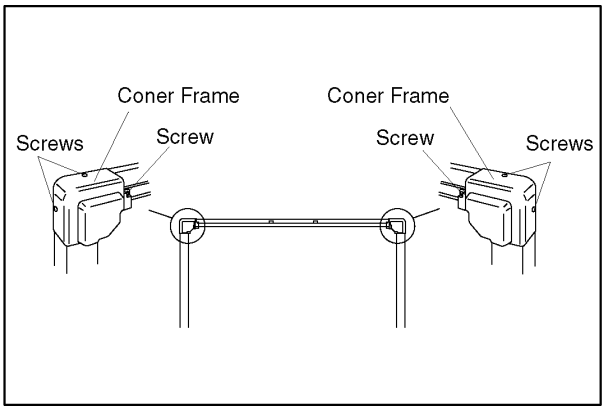

(4) Unlock 2 spacers on the THERMO SENSOR Board and the THERMO SENSOR Board. (Only for the right side corner frame)

(5) Remove 4 screws and remove shield plate.

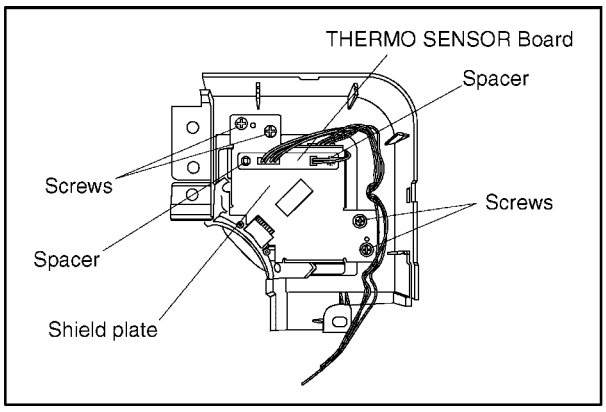

(6) Disconnect 1 connector on the INFRARED SENSOR Board.

(7) Remove screw (A) and remove INFRARED SENSOR Board.

(8) Remove screw (B) and loose 2 screws (C) and remove ULTRASONIC SENSOR Board.

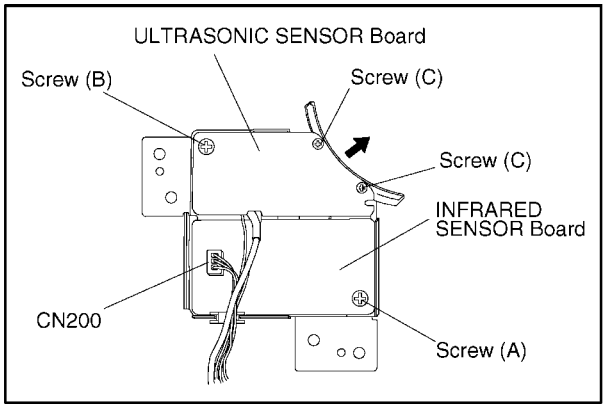

7.2.4. Replacing the Screen Motor

(1) Remove the screen. (See 7.2.1)

(2) Remove 2 screws.

(3) Remove the screen motor with the bracket, and disconnect the connector.

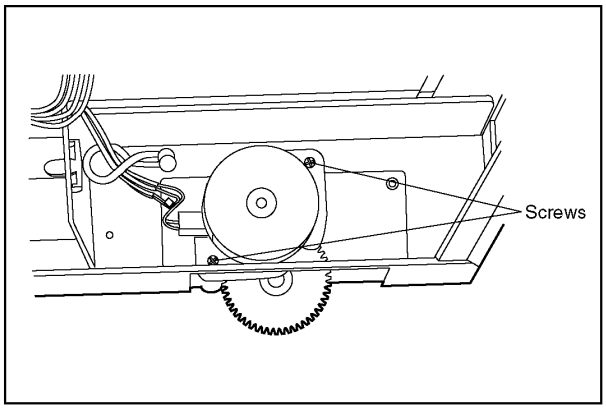

7.2.5. Replacing the Fluorescent Lamp

(1) Remove the screen (See 7.2.1)

(2) Remove 7 screws (a).

(3) Remove screw (b) and remove the slit plate.

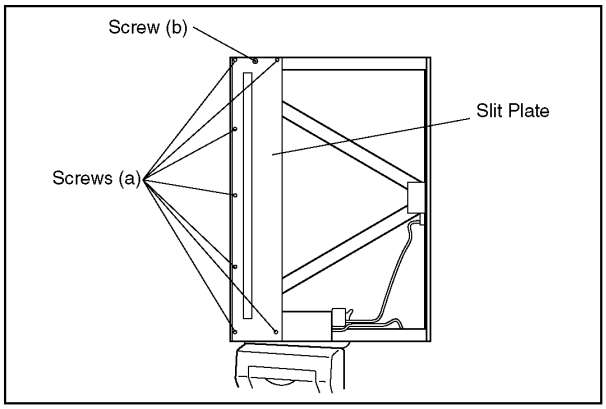

(4) Twist the fluorescent lamp by 90 degrees to remove it as shown in the figure.

Note

Because access to this lamp is limited, please twist the lamp as shown in figure from the bottom.

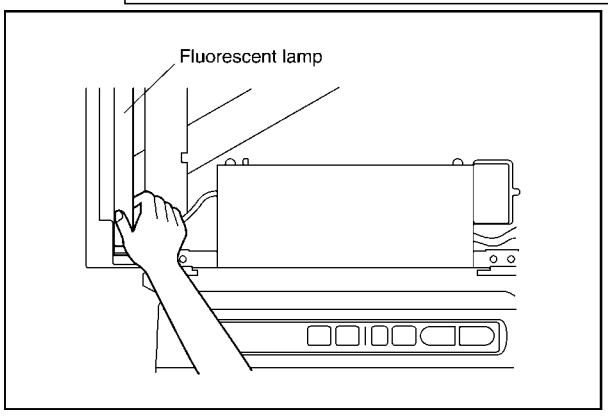

7.2.6. Removing the Printer

Note

Always use screws for plastic base (screws with a coarse thread) at the locations marked by "P" at the printer.

(1) Remove the screen. (See 7.2.1)

(2) Disconnect the 2 connector cables, connecting between optical section and printer section.

Also disconnect the clamps of the harness at the same time.

(3) Remove 4 screws.

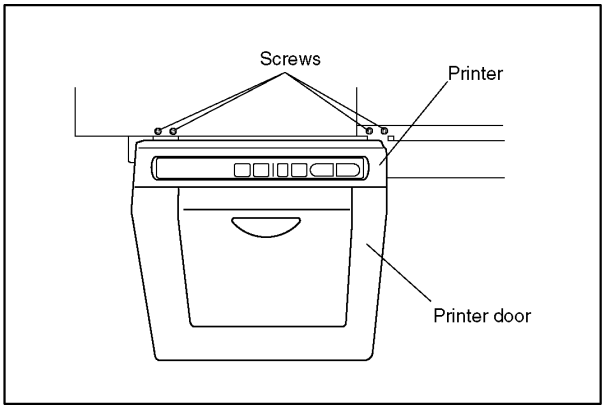

(4) Remove 2 screws and remove the printer.

Note

- **From the front, slide the printer to the right and carefully lower it.**
- **When lowering the printer, lower it slowly while passing the two harnesses through the hole in the support frame.**
- **Be careful not to drop the printer.**

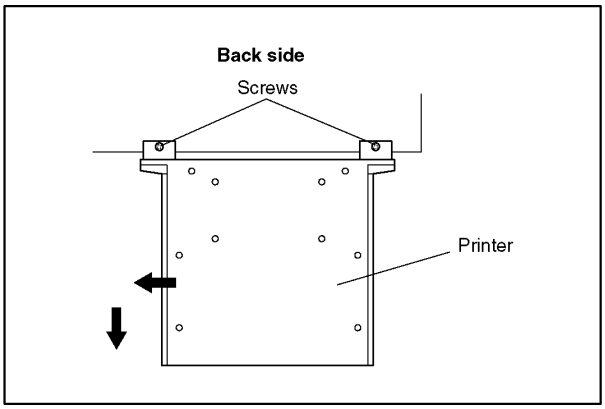

7.2.7. Removing the Printer Door

(1) Remove 10 screws and remove the rear cover.

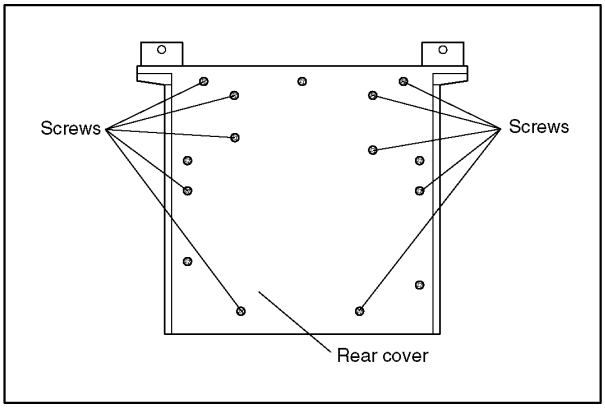

(2) Remove 2 screws and remove the shield plate.

(3) Disconnect the connectors CN3, CN5 on the SUB Board and CN403 on the POWER Board.

Note

Remove the harness clamp and core.

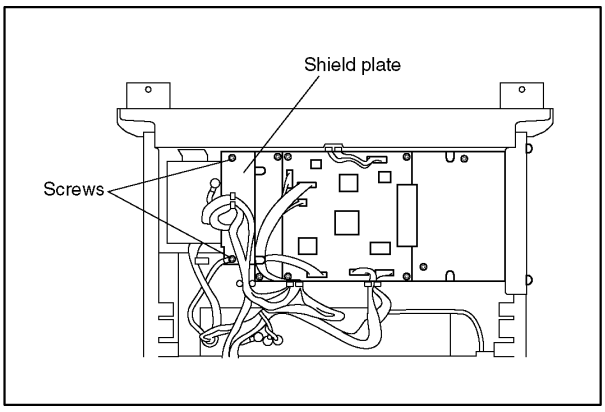

(4) Remove 3 screws (A) and remove the side panel (L).

(5) Remove 3 screws (B) and remove the side panel (R).

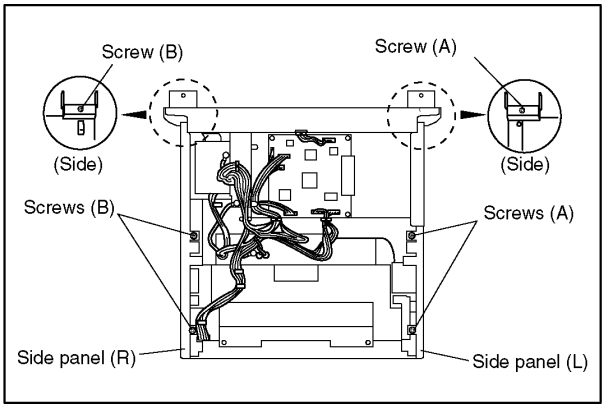

(6) Remove 4 screws (A) and remove the fulcrum support (R).

(7) Remove E-ring as shown in the figure and pull out the gear (A) and (B).

(8) Remove 4 screws (B) and remove the fulcrum support (L).

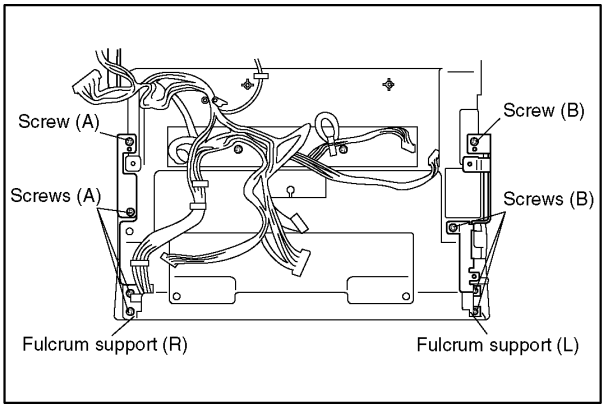

(9) Remove the printer door.

Note

Remove the printer door in open condition together with the harness.

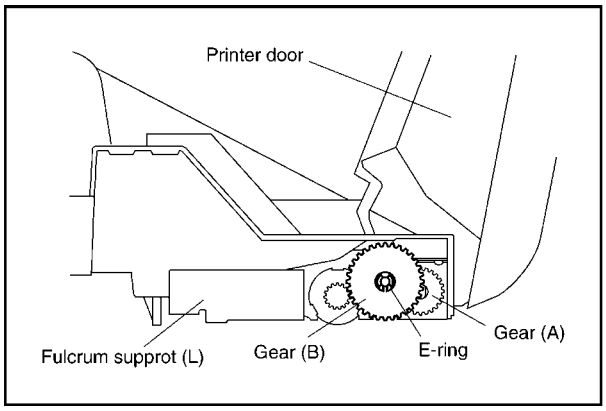

7.2.8. Replacing the Power Switch

(1) Remove the rear cover. (See 7.2.7-1))

(2) remove the side panel (L). (See 7.2.7-4))

(3) Disconnect the power switch and AC inlet harness.

(4) Push down the lock of the power switch (A), and then push it out in direction (B).

Note

At the time of assembly, refer to the Label for Service Personnel attached to the unit.

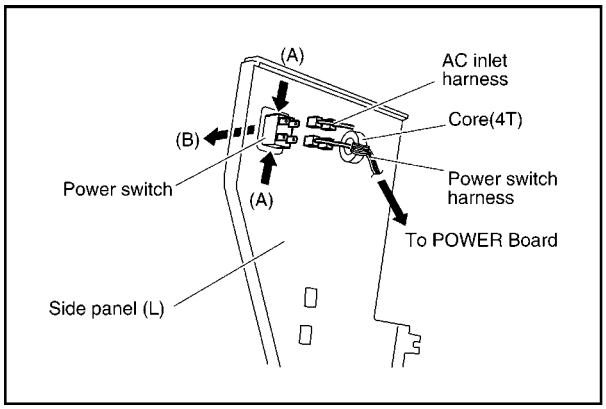

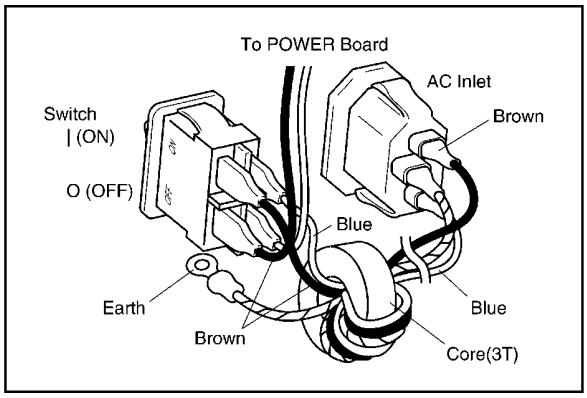

7.2.9. Replacing the Paper Feed Motor

(1) Remove the printer door. (See 7.2.7)

(2) Unlock the stoppers and remove the paper cover.

(3) Remove 4 screws.

Note

Push the stopper root in arrow direction and remove the paper stock cover.

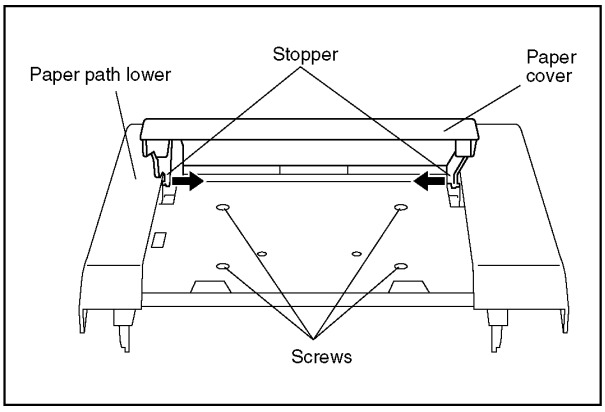

(4) Remove 6 screws and remove the paper path lower.

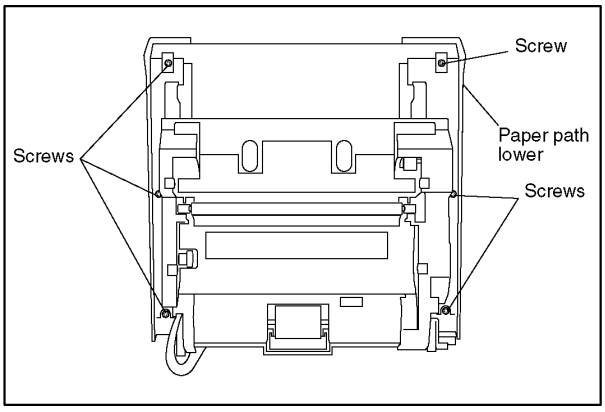

(5) Remove 4 screws and remove the hopper brackets.

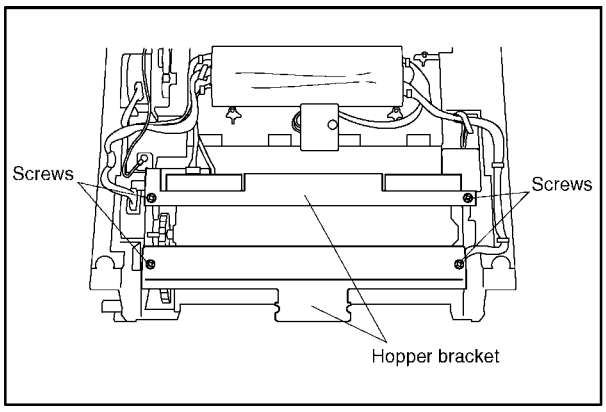

(6) Disconnect the connector from the paper feed motor shown in the figure.

(7) Remove the 3 screws and raise the paper feed motor slightly and remove it.

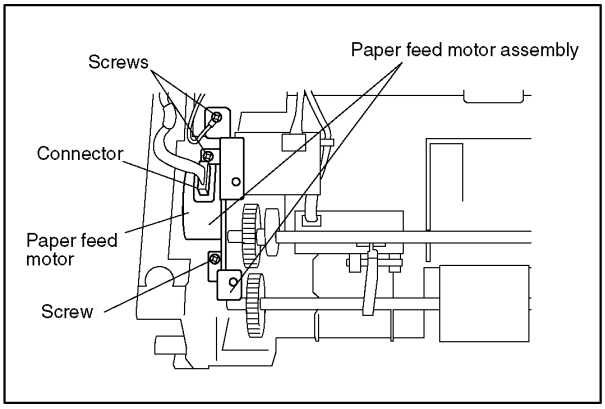

(8) Remove 2 screws and remove the paper feed motor.

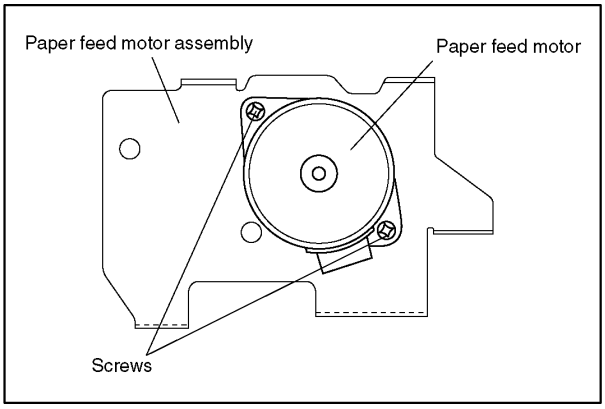

7.2.10. Replacing the Printer Motor

(1) Remove the printer door. (See 7.2.7)

(2) Remove the paper cover and paper path lower. (See 7.2.9-2), through 4))

(3) Disconnect the connector from the printer motor shown in the figure.

(4) Remove 4 screws (A) and remove the 1 screw (B) from the ground harness shown in the figure.

(5) Remove the paper path upper.

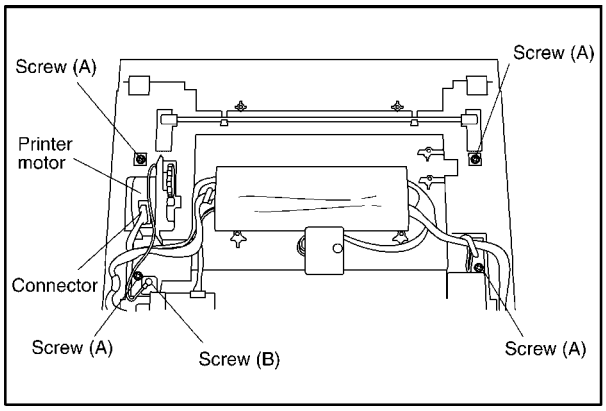

以上内容仅为本文档的试下载部分，为可阅读页数的一半内容。如要下载或阅读全文，请访问：https://d.book118.com/798077003051006120