Jetson Nano Carrier Board Reference Design
HDMI, USB, M.2, Gbe

TABLE OF CONTENTS

Page	Description
1	Table of Contents
2	Blank Page
3	Power Tree
4	SODIMM connector 1/3
5	SODIMM connector 2/3
6	SODIMM connector 3/3
7	USB2.0 micro
8	USB3.1 x4 HUB
9	USB3.1 Type-A x2 (A)
10	USB3.1 Type-A x2 (B)
11	DC Jack
12	3V3 DCDC and 1V8 LDO
13	Power ON/OFF Logic
14	M.2 Key-E
15	Gigabit Ethernet POE
16	HDMI
17	DisplayPort
18	CAM Connector
19	40Pin GPIO expansion header
20	Fan, Debug and EEPROM
21	Loop Back Test
22	Mechanical

Page	Description

I2C Port Assignments

Slave Device	BUS:Device address
BOARDID EEPROM	I2C2 : 7'57h
RTS5411S USB3.1 HUB	CAM I2C : 7'6Ah
M.2 KEY-E WIFI/BT	I2C2 : TBD

ALL NVIDIA DESIGN SPECIFICATIONS, REFERENCE SPECIFICATIONS, REFERENCE BOARDS, FILES, DRAWINGS, DIAGNOSTICS, LISTS AND OTHER DOCUMENTS OR INFORMATION (TOGETHER AND SEPARATELY, 'MATERIALS') ARE BEING PROVIDED 'AS IS'. THE MATERIALS CONTAIN KNOWN AND UNKNOWN VIOLATIONS OR DEVIATIONS OF INDUSTRY STANDARDS AND SPECIFICATIONS. NVIDIA MAKES NO WARRANTIES, EXPRESSED, IMPLIED, STATUTORY OR OTHERWISE WITH RESPECT TO THE MATERIALS OR OTHERWISE, AND EXPRESSLY DISCLAIMS ALL IMPLIED WARRANTIES INCLUDING, WITHOUT LIMITATION, THE WARRANTIES OF DESIGN, OF NONINFRINGEMENT, MERCHANTABILITY OR FITNESS FOR A PARTICULAR PURPOSE, OR ARISING FROM A COURSE OF DEALING, TRADE USAGE, TRADE PRACTICE, OR INDUSTRY STANDARDS.

ASSEMBLY	Jetson Nano Carrier Board
PAGE DETAIL	Table of Contents

NVIDIA CORPORATION
2701 SAN TOMAS EXPRESSWAY
SANTA CLARA, CA 95050, USA

NV_PN			
PCB REV		PAGE	1 OF 23
BOM REV	A	DATE	08-MAY-2019

Blank Page

ALL NVIDIA DESIGN SPECIFICATIONS, REFERENCE SPECIFICATIONS, REFERENCE BOARDS, FILES, DRAWINGS, DIAGNOSTICS, LISTS AND OTHER DOCUMENTS OR INFORMATION (TOGETHER AND SEPARATELY, 'MATERIALS') ARE BEING PROVIDED 'AS IS'. THE MATERIALS CONTAIN KNOWN AND UNKNOWN VIOLATIONS OR DEVIATIONS OF INDUSTRY STANDARDS AND SPECIFICATIONS. NVIDIA MAKES NO WARRANTIES, EXPRESSED, IMPLIED, STATUTORY OR OTHERWISE WITH RESPECT TO THE MATERIALS OR OTHERWISE, AND EXPRESSLY DISCLAIMS ALL IMPLIED WARRANTIES INCLUDING, WITHOUT LIMITATION, THE WARRANTIES OF DESIGN, OF NONINFRINGEMENT, MERCHANTABILITY OR FITNESS FOR A PARTICULAR PURPOSE, OR ARISING FROM A COURSE OF DEALING, TRADE USAGE, TRADE PRACTICE, OR INDUSTRY STANDARDS.

ASSEMBLY	Jetson Nano Carrier Board
PAGE DETAIL	Block Diagram

NVIDIA CORPORATION
2701 SAN TOMAS EXPRESSWAY
SANTA CLARA, CA 95050, USA

NV_PN			
PCB REV		PAGE	2 OF 23
BOM REV	A	DATE	08-MAY-2019

Power Tree

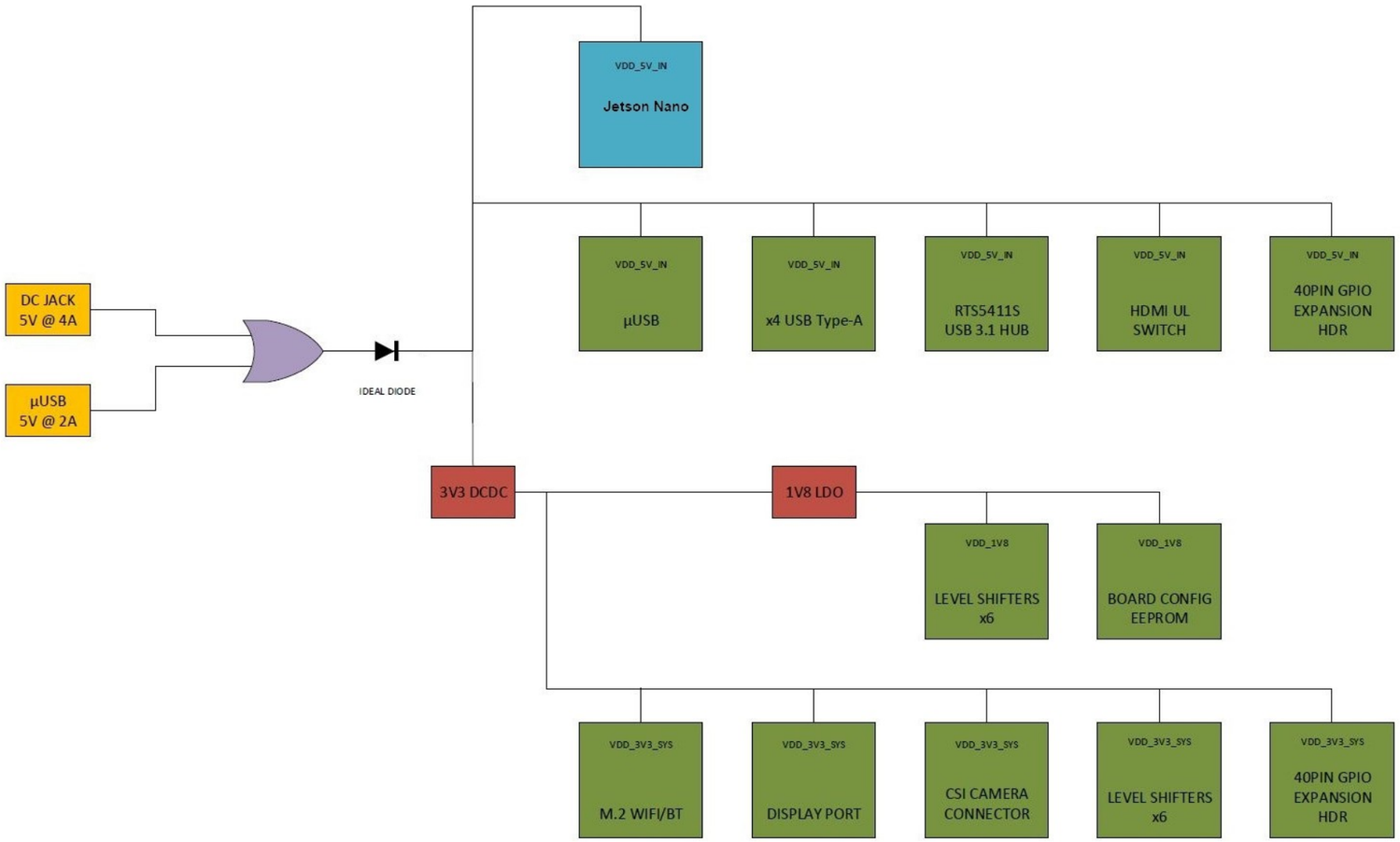

ASSEMBLY	Jetson Nano Carrier Board
PAGE DETAIL	Power Tree

NVIDIA CORPORATION
2701 SAN TOMAS
EXPRESSWAY
SANTA CLARA, CA 95050, USA

NV_PN			
PCB REV		PAGE	3 OF 23
BOM REV	A	DATE	08-MAY-2019

ALL NVIDIA DESIGN SPECIFICATIONS, REFERENCE SPECIFICATIONS, REFERENCE BOARDS, FILES, DRAWINGS, DIAGNOSTICS, LISTS AND OTHER DOCUMENTS OR INFORMATION (TOGETHER AND SEPARATELY, 'MATERIALS') ARE BEING PROVIDED 'AS IS'. THE MATERIALS CONTAIN KNOWN AND UNKNOWN VIOLATIONS OR DEVIATIONS OF INDUSTRY STANDARDS AND SPECIFICATIONS. NVIDIA MAKES NO WARRANTIES, EXPRESSED, IMPLIED, STATUTORY OR OTHERWISE WITH RESPECT TO THE MATERIALS OR OTHERWISE, AND EXPRESSLY DISCLAIMS ALL IMPLIED WARRANTIES INCLUDING, WITHOUT LIMITATION, THE WARRANTIES OF DESIGN, OF NONINFRINGEMENT, MERCHANTABILITY OR FITNESS FOR A PARTICULAR PURPOSE, OR ARISING FROM A COURSE OF DEALING, TRADE USAGE, TRADE PRACTICE, OR INDUSTRY STANDARDS.

UART, I2C, CAN and GPIOs

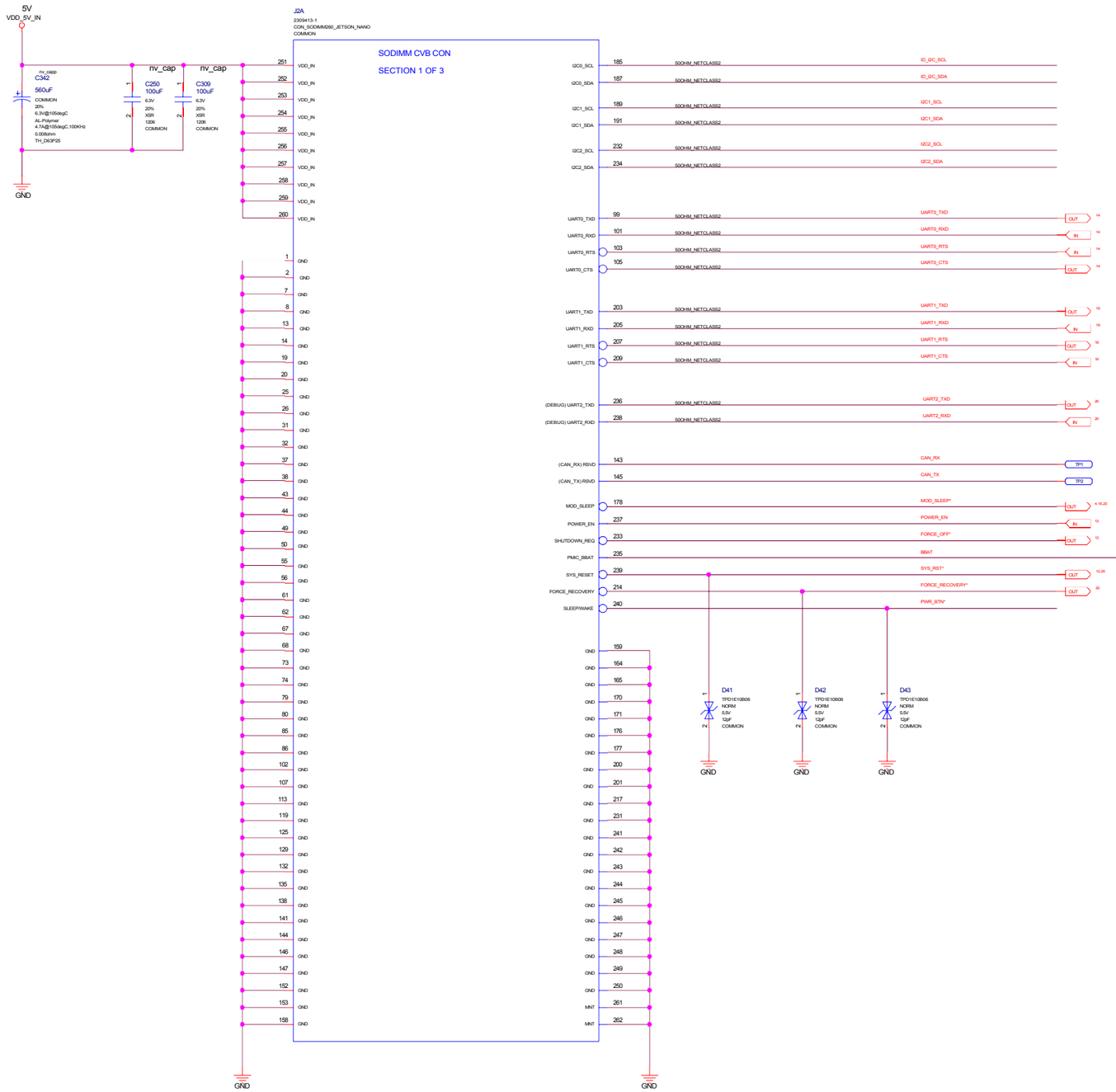

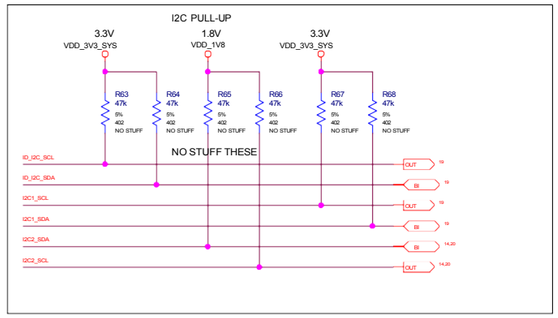

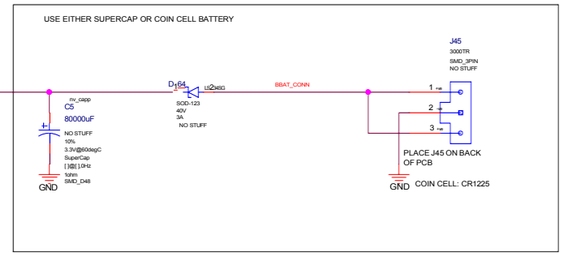

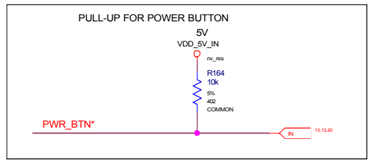

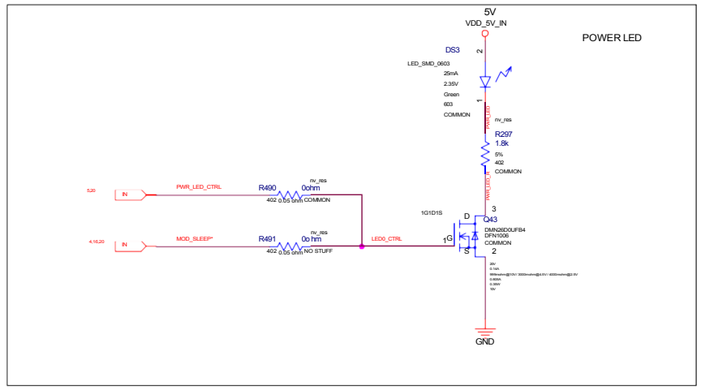

ASSEMBLY	Jetson Nano Carrier Board
PAGE DETAIL	SODIMM connector 1/3

ALL NVIDIA DESIGN SPECIFICATIONS, REFERENCE SPECIFICATIONS, REFERENCE BOARDS, FILES, DRAWINGS, DIAGNOSTICS, LISTS AND OTHER DOCUMENTS OR INFORMATION (TOGETHER AND SEPARATELY, 'MATERIALS') ARE BEING PROVIDED 'AS IS'. THE MATERIALS
CONTAIN KNOWN AND UNKNOWN VIOLATIONS OR DEVIATIONS OF INDUSTRY STANDARDS AND SPECIFICATIONS. NVIDIA MAKES NO WARRANTIES, EXPRESSED, IMPLIED, STATUTORY OR OTHERWISE WITH RESPECT TO THE MATERIALS OR OTHERWISE, AND EXPRESSLY DISCLAIMS
ALL
IMPLIED WARRANTIES INCLUDING, WITHOUT LIMITATION, THE WARRANTIES OF DESIGN, OF NONINFRINGEMENT, MERCHANTABILITY OR FITNESS FOR A PARTICULAR PURPOSE, OR ARISING FROM A COURSE OF DEALING, TRADE USAGE, TRADE PRACTICE, OR INDUSTRY
STANDARDS.

NVIDIA CORPORATION
2701 SAN TOMAS
EXPRESSWAY
SANTA CLARA, CA 95050, USA

NV_PN			
PCB REV		PAGE	4 OF 23
BOM REV	A	DATE	08-MAY-2019

GPIOs, USB2.0, I2S, SPI, GBe and CSI

J26
2309413-1
CON_SODIMMD90_JETSON_NANO
COMMON

SODIMM CVB CON
SECTION 2 OF 3

uUSB Con

7	BI	USB0_AP_P	90DIFF_NETCLASS1	111	USB0_D
7	BI	USB0_AP_N	90DIFF_NETCLASS1	109	USB0_D

USB Type-A Con

8	BI	USB1_AP_P	90DIFF_NETCLASS1	117	USB1_D
8	BI	USB1_AP_N	90DIFF_NETCLASS1	115	USB1_D

M.2 BT

14	BI	USB2_AP_P	90DIFF_NETCLASS1	123	USB2_D
14	BI	USB2_AP_N	90DIFF_NETCLASS1	121	USB2_D

40Pin GPIO HDR

19	OUT	I2S0_SDOUT	50OHM_NETCLASS1	193	I2S0_DOUT
19	OUT	I2S0_SDIN	50OHM_NETCLASS2	195	I2S0_DIN
19	IN	I2S0_LRCK	50OHM_NETCLASS2	197	I2S0_FS
19	OUT	I2S0_SCLK	50OHM_NETCLASS2	199	I2S0_SCLK

M.2 BT

14	OUT	I2S1_SDOUT	50OHM_NETCLASS1	220	I2S1_DOUT
14	OUT	I2S1_SDIN	50OHM_NETCLASS2	222	I2S1_DIN
14	IN	I2S1_LRCK	50OHM_NETCLASS2	224	I2S1_FS
14	OUT	I2S1_SCLK	50OHM_NETCLASS2	226	I2S1_SCLK

ETHERNET CON

15	OUT	GBE_LED_LINK			188	GBE_LED_LINK
15	OUT	GBE_LED_ACT			194	GBE_LED_ACT
15	BI	GBE_MDI0_P	DP_GBE_MDI0	GENERIC_DEZ1	186	GBE_MDI0
15	BI	GBE_MDI0_N	DP_GBE_MDI0	GENERIC_DEZ1	184	GBE_MDI0
15	BI	GBE_MDI1_P	DP_GBE_MDI1	GENERIC_DEZ1	192	GBE_MDI1
15	BI	GBE_MDI1_N	DP_GBE_MDI1	GENERIC_DEZ1	190	GBE_MDI1
15	BI	GBE_MDI2_P	DP_GBE_MDI2	GENERIC_DEZ1	198	GBE_MDI2
15	BI	GBE_MDI2_N	DP_GBE_MDI2	GENERIC_DEZ1	196	GBE_MDI2
15	BI	GBE_MDI3_P	DP_GBE_MDI3	GENERIC_DEZ1	204	GBE_MDI3
15	BI	GBE_MDI3_N	DP_GBE_MDI3	GENERIC_DEZ1	202	GBE_MDI3

PUT TESTPOINT ON BOTTOM OF PCB

TP110	SDIO_D0	50OHM_NETCLASS1	219	SDMMC_DAT0
TP111	SDIO_D1	50OHM_NETCLASS1	221	SDMMC_DAT1
TP112	SDIO_D2	50OHM_NETCLASS1	223	SDMMC_DAT2
TP113	SDIO_D3	50OHM_NETCLASS1	225	SDMMC_DAT3
TP114	SDIO_CMD	50OHM_NETCLASS1	227	SDMMC_CMD
TP115	SDIO_CLK	50OHM_NETCLASS1	229	SDMMC_CLK

7	IN	USB0_VBUS_DET*	87	GPIO00 (USB_VBUS_EN0)
19	BI	GPIO01	118	GPIO01 (CLK)
14	IN	BT_M2_WAKE_AP	124	GPIO02
14	OUT	BT_M2_EN	126	GPIO03
4,20	OUT	PWR_LED_CTRL	127	GPIO04
14	OUT	W_DISABLE1_CTRL	128	GPIO05
18	OUT	CAM_MUX_SEL	130	GPIO06
19	BI	GPIO07	206	GPIO07 (PWM)
20	IN	FAN_TACH	208	GPIO08 (SDMMC_CD)
19	OUT	GPIO09	211	GPIO09 (AUID_MCLK)
14	IN	M2_E_ALERT	212	GPIO10
19	BI	GPIO11	216	GPIO11 (CLK)
19	BI	GPIO12	218	GPIO12
19	BI	GPIO13	228	GPIO13 (PWM)
20	OUT	FAN_PWM	230	GPIO14 (PWM)

CAM FPC Con

CSI0_D0	6	90DIFF_NETCLASS1	CSI0_D0_P	IN 18
CSI0_D0	4	90DIFF_NETCLASS1	CSI0_D0_N	IN 18
CSI0_D1	18	90DIFF_NETCLASS1	CSI0_D1_P	IN 18
CSI0_D1	16	90DIFF_NETCLASS1	CSI0_D1_N	IN 18
CSI0_CLK	12	90DIFF_NETCLASS1	CSI0_CLK_P	IN 18
CSI0_CLK	10	90DIFF_NETCLASS1	CSI0_CLK_N	IN 18

PUT TESTPOINT ON BOTTOM OF PCB

CSI1_D0	5	90DIFF_NETCLASS1	CSI1_D0_P	TP48
CSI1_D0	3	90DIFF_NETCLASS1	CSI1_D0_N	TP47
CSI1_D1	17	90DIFF_NETCLASS1	CSI1_D1_P	TP50
CSI1_D1	15	90DIFF_NETCLASS1	CSI1_D1_N	TP49
(CSI1_CLK)RSVD	11	90DIFF_NETCLASS1	CSI1_CLK_P	TP52
(CSI1_CLK)RSVD	9	90DIFF_NETCLASS1	CSI1_CLK_N	TP51
CSI2_D0	24	90DIFF_NETCLASS1	CSI2_D0_P	TP120
CSI2_D0	22	90DIFF_NETCLASS1	CSI2_D0_N	TP121
CSI2_D1	36	90DIFF_NETCLASS1	CSI2_D1_P	TP122
CSI2_D1	34	90DIFF_NETCLASS1	CSI2_D1_N	TP123
CSI2_CLK	30	90DIFF_NETCLASS1	CSI2_CLK_P	TP124
CSI2_CLK	28	90DIFF_NETCLASS1	CSI2_CLK_N	TP125
CSI3_D0	23	90DIFF_NETCLASS1	CSI3_D0_P	TP70
CSI3_D0	21	90DIFF_NETCLASS1	CSI3_D0_N	TP69
CSI3_D1	35	90DIFF_NETCLASS1	CSI3_D1_P	TP72
CSI3_D1	33	90DIFF_NETCLASS1	CSI3_D1_N	TP71
CSI3_CLK	29	90DIFF_NETCLASS1	CSI3_CLK_P	TP74
CSI3_CLK	27	90DIFF_NETCLASS1	CSI3_CLK_N	TP73
CSI4_D2	42	90DIFF_NETCLASS1	CSI4_D2_P	TP60
CSI4_D2	40	90DIFF_NETCLASS1	CSI4_D2_N	TP59
CSI4_D0	48	90DIFF_NETCLASS1	CSI4_D0_P	TP54
CSI4_D0	46	90DIFF_NETCLASS1	CSI4_D0_N	TP53
CSI4_CLK	54	90DIFF_NETCLASS1	CSI4_CLK_P	TP58
CSI4_CLK	52	90DIFF_NETCLASS1	CSI4_CLK_N	TP57
CSI4_D1	60	90DIFF_NETCLASS1	CSI4_D1_P	TP56
CSI4_D1	58	90DIFF_NETCLASS1	CSI4_D1_N	TP55
CSI4_D3	66	90DIFF_NETCLASS1	CSI4_D3_P	TP62
CSI4_D3	64	90DIFF_NETCLASS1	CSI4_D3_N	TP61

CAM0_MCLK	116	50OHM_NETCLASS1	CAM0_MCLK	OUT 18
CAM0_PWDN	114		CAM0_PWDN	OUT 18
CAM1_MCLK	122	50OHM_NETCLASS1	CAM1_MCLK	TP126
CAM1_PWDN	120		CAM1_PWDN	TP127

CAM FPC Con USB3.1 HUB

CAM_I2C_SCL	213	50OHM_NETCLASS2	CAM_I2C_SCL	OUT 8,18
CAM_I2C_SDA	215	50OHM_NETCLASS2	CAM_I2C_SDA	BI 8,18

40Pin GPIO HDR

SPI0_SCK	91	50OHM_NETCLASS1	SPI0_SCK	OUT 19
SPI0_MISO	93	50OHM_NETCLASS2	SPI0_MISO	IN 19
SPI0_MOSI	89	50OHM_NETCLASS2	SPI0_MOSI	OUT 19
SPI0_CS0	95	50OHM_NETCLASS2	SPI0_CS0	IN 19
SPI0_CS1	97	50OHM_NETCLASS2	SPI0_CS1	IN 19
SPI1_SCK	106	50OHM_NETCLASS1	SPI1_SCK	OUT 19
SPI1_MISO	108	50OHM_NETCLASS2	SPI1_MISO	IN 19
SPI1_MOSI	104	50OHM_NETCLASS2	SPI1_MOSI	OUT 19
SPI1_CS0	110	50OHM_NETCLASS2	SPI1_CS0	IN 19
SPI1_CS1	112	50OHM_NETCLASS2	SPI1_CS1	IN 19

VDD_3V3_SYS (3.3V)

R88 402 1.6k 1% 0.1W COMMON — CAM_I2C_SDA

R87 402 1.6k 1% COMMON — CAM_I2C_SCL

ALL NVIDIA DESIGN SPECIFICATIONS, REFERENCE SPECIFICATIONS, REFERENCE BOARDS, FILES, DRAWINGS, DIAGNOSTICS, LISTS AND OTHER DOCUMENTS OR INFORMATION (TOGETHER AND SEPARATELY, 'MATERIALS') ARE BEING PROVIDED 'AS IS'. THE MATERIALS CONTAIN KNOWN AND UNKNOWN VIOLATIONS OR DEVIATIONS OF INDUSTRY STANDARDS AND SPECIFICATIONS. NVIDIA MAKES NO WARRANTIES, EXPRESSED, IMPLIED, STATUTORY OR OTHERWISE WITH RESPECT TO THE MATERIALS OR OTHERWISE, AND EXPRESSLY DISCLAIMS ALL IMPLIED WARRANTIES INCLUDING, WITHOUT LIMITATION, THE WARRANTIES OF DESIGN, OF NONINFRINGEMENT, MERCHANTABILITY OR FITNESS FOR A PARTICULAR PURPOSE, OR ARISING FROM A COURSE OF DEALING, TRADE USAGE, TRADE PRACTICE, OR INDUSTRY STANDARDS.

ASSEMBLY	Jetson Nano Carrier Board
PAGE DETAIL	SODIMM connector 2/3

NVIDIA CORPORATION
2701 SAN TOMAS EXPRESSWAY
SANTA CLARA, CA 95050, USA

NV_PN			
PCB REV		PAGE	5 OF 23
BOM REV	A	DATE	08-MAY-2019

HDMI, DP, DSI, USBSS and PCIe

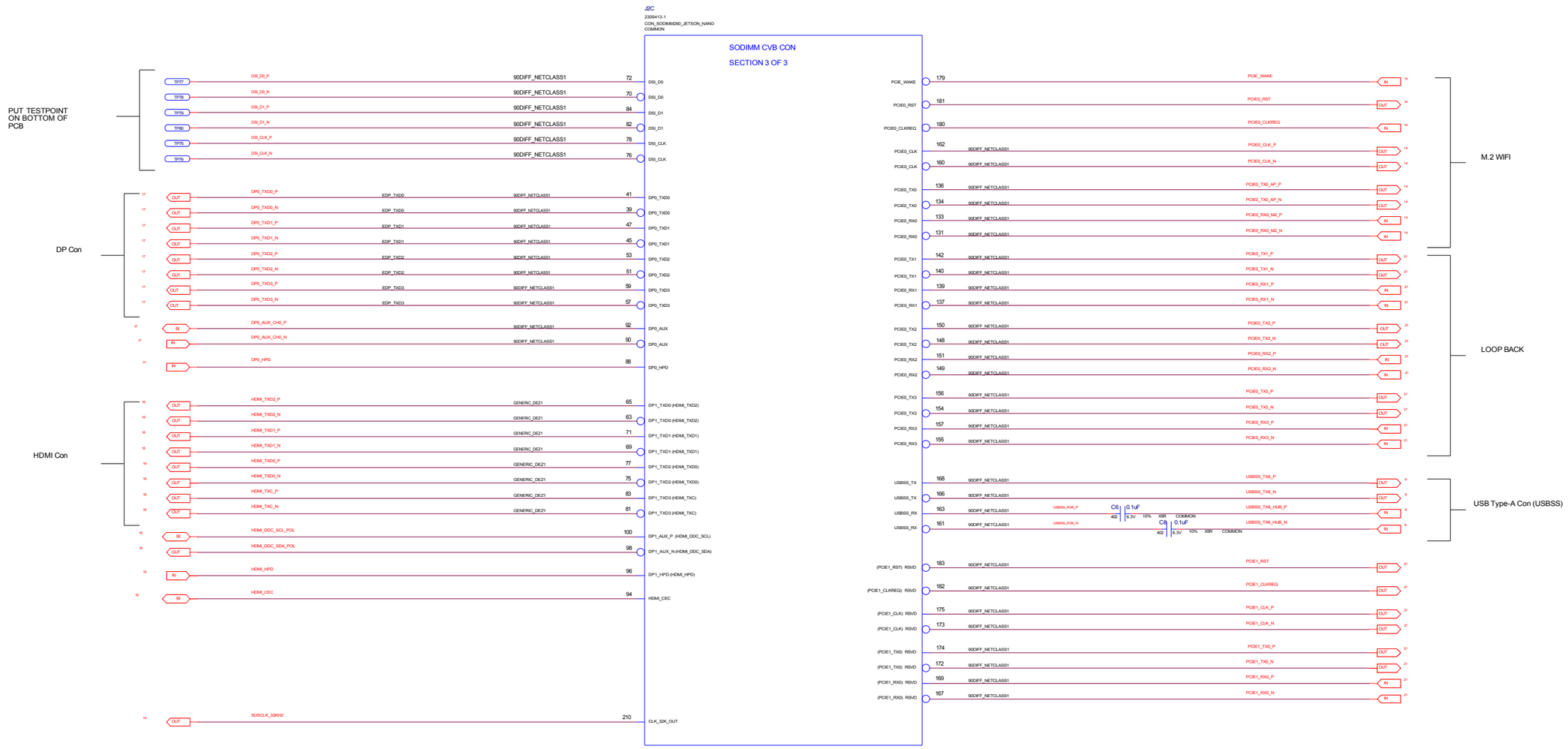

ASSEMBLY	Jetson Nano Carrier Board
PAGE DETAIL	SODIMM connector 3/3

ALL NVIDIA DESIGN SPECIFICATIONS, REFERENCE SPECIFICATIONS, REFERENCE BOARDS, FILES, DRAWINGS, DIAGNOSTICS, LISTS AND OTHER DOCUMENTS OR INFORMATION (TOGETHER AND SEPARATELY, 'MATERIALS') ARE BEING PROVIDED 'AS IS'. THE MATERIALS CMOANY TAIN KNOWN AND UNKNOWN VIOLATIONS OR DEVIATIONS OF INDUSTRY STANDARDS AND SPECIFICATIONS. NVIDIA MAKES NO WARRANTIES, EXPRESSED, IMPLIED, STATUTORY OR OTHERWISE WITH RESPECT TO THE MATERIALS OR OTHERWISE, AND EXPRESSLY DISCLAIMS ALL IMPLIED WARRANTIES INCLUDING, WITHOUT LIMITATION, THE WARRANTIES OF DESIGN, OF NONINFRINGEMENT, MERCHANTABILITY OR FITNESS FOR A PARTICULAR PURPOSE, OR ARISING FROM A COURSE OF DEALING, TRADE USAGE, TRADE PRACTICE, OR INDUSTRY STANDARDS.

NVIDIA CORPORATION
2701 SAN TOMAS
EXPRESSWAY
SANTA CLARA, CA 95050, USA

NV_PN			
PCB REV		PAGE	6 OF 23
BOM REV	A	DATE	08-MAY-2019

MICRO B USB 2.0 CONNECTOR

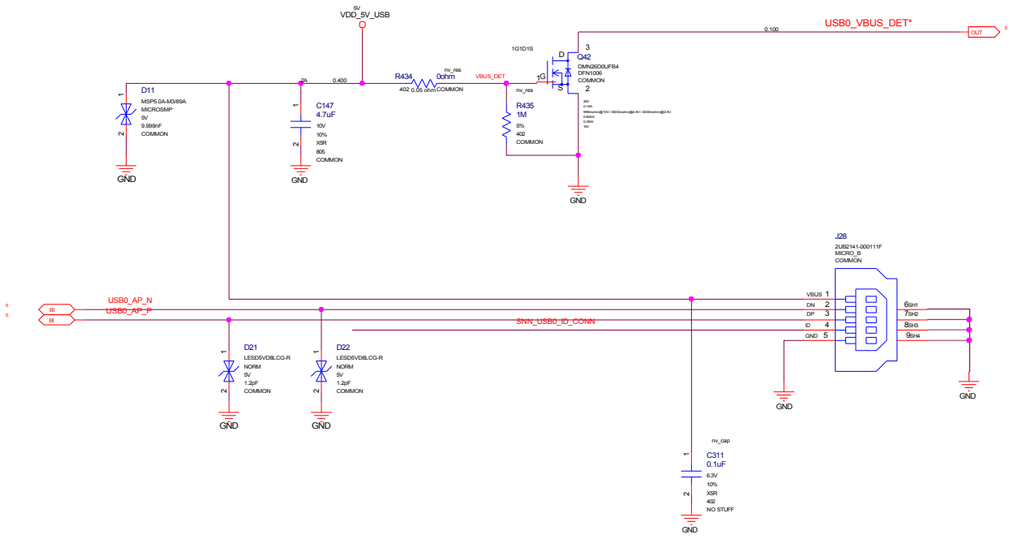

ALL NVIDIA DESIGN SPECIFICATIONS, REFERENCE SPECIFICATIONS, REFERENCE BOARDS, FILES, DRAWINGS, DIAGNOSTICS, LISTS AND OTHER DOCUMENTS OR INFORMATION (TOGETHER AND SEPARATELY, 'MATERIALS') ARE BEING PROVIDED 'AS IS'. THE MATERIALS MAY CONTAIN KNOWN AND UNKNOWN VIOLATIONS OR DEVIATIONS OF INDUSTRY STANDARDS AND SPECIFICATIONS. NVIDIA MAKES NO WARRANTIES, EXPRESSED, IMPLIED, STATUTORY OR OTHERWISE WITH RESPECT TO THE MATERIALS OR OTHERWISE, AND EXPRESSLY DISCLAIMS ALL IMPLIED WARRANTIES INCLUDING, WITHOUT LIMITATION, THE WARRANTIES OF DESIGN, OF NONINFRINGEMENT, MERCHANTABILITY OR FITNESS FOR A PARTICULAR PURPOSE, OR ARISING FROM A COURSE OF DEALING, TRADE USAGE, TRADE PRACTICE, OR INDUSTRY STANDARDS.

ASSEMBLY	Jetson Nano Carrier Board
PAGE DETAIL	USB2.0 micro

NVIDIA CORPORATION
2701 SAN TOMAS
EXPRESSWAY
SANTA CLARA, CA 95050, USA

NV_PN			
PCB REV		PAGE	7 OF 23
BOM REV	A	DATE	08-MAY-2019

USB3.1 HUB x4 PORTS

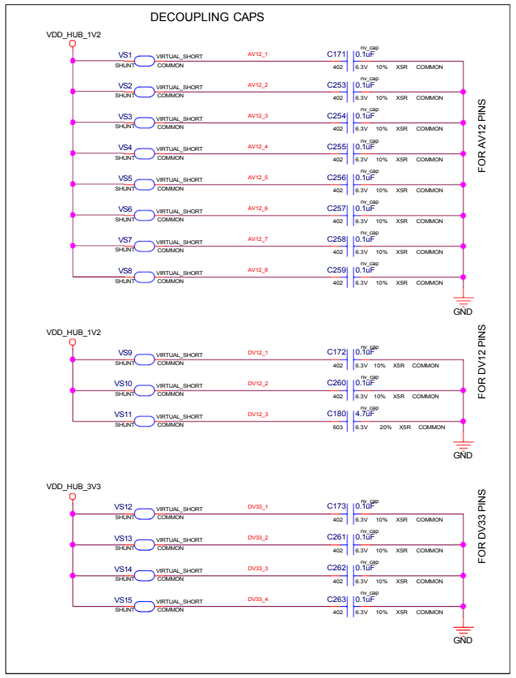

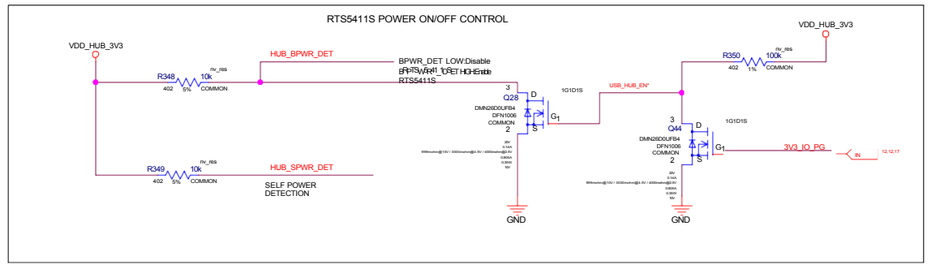

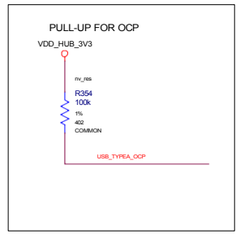

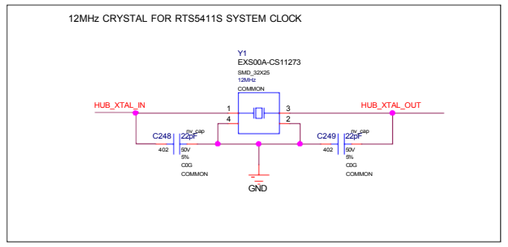

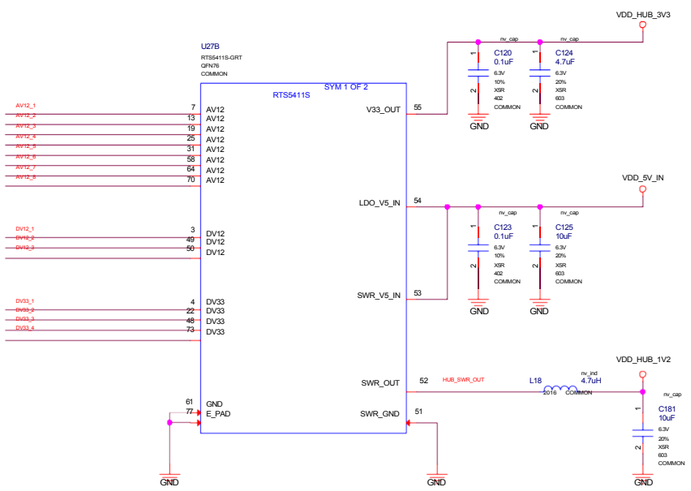

I2C slave addrs: 7'1101010b = 7'h6A

ALL NVIDIA DESIGN SPECIFICATIONS, REFERENCE SPECIFICATIONS, REFERENCE BOARDS, FILES, DRAWINGS, DIAGNOSTICS, LISTS AND OTHER DOCUMENTS OR INFORMATION (TOGETHER AND SEPARATELY, "MATERIALS") ARE BEING PROVIDED "AS IS". THE MATERIALS CONTAIN KNOWN AND UNKNOWN VIOLATIONS OR DEVIATIONS OF INDUSTRY STANDARDS AND SPECIFICATIONS. NVIDIA MAKES NO WARRANTIES, EXPRESSED, IMPLIED, STATUTORY OR OTHERWISE WITH RESPECT TO THE MATERIALS OR OTHERWISE, AND EXPRESSLY DISCLAIMS ALL IMPLIED WARRANTIES INCLUDING, WITHOUT LIMITATION, THE WARRANTIES OF DESIGN, OF NONINFRINGEMENT, MERCHANTABILITY OR FITNESS FOR A PARTICULAR PURPOSE, OR ARISING FROM A COURSE OF DEALING, TRADE USAGE, TRADE PRACTICE, OR INDUSTRY STANDARDS.

ASSEMBLY	Jetson Nano Carrier Board
PAGE DETAIL	USB3.1 x4 HUB

NVIDIA CORPORATION
2701 SAN TOMAS EXPRESSWAY
SANTA CLARA, CA 95050, USA

NV_PN			
PCB REV		PAGE	8 OF 23
BOM REV	A	DATE	08-MAY-2019

USB 3.0 TYPE A x2 CONNECTOR (1 OF 2)

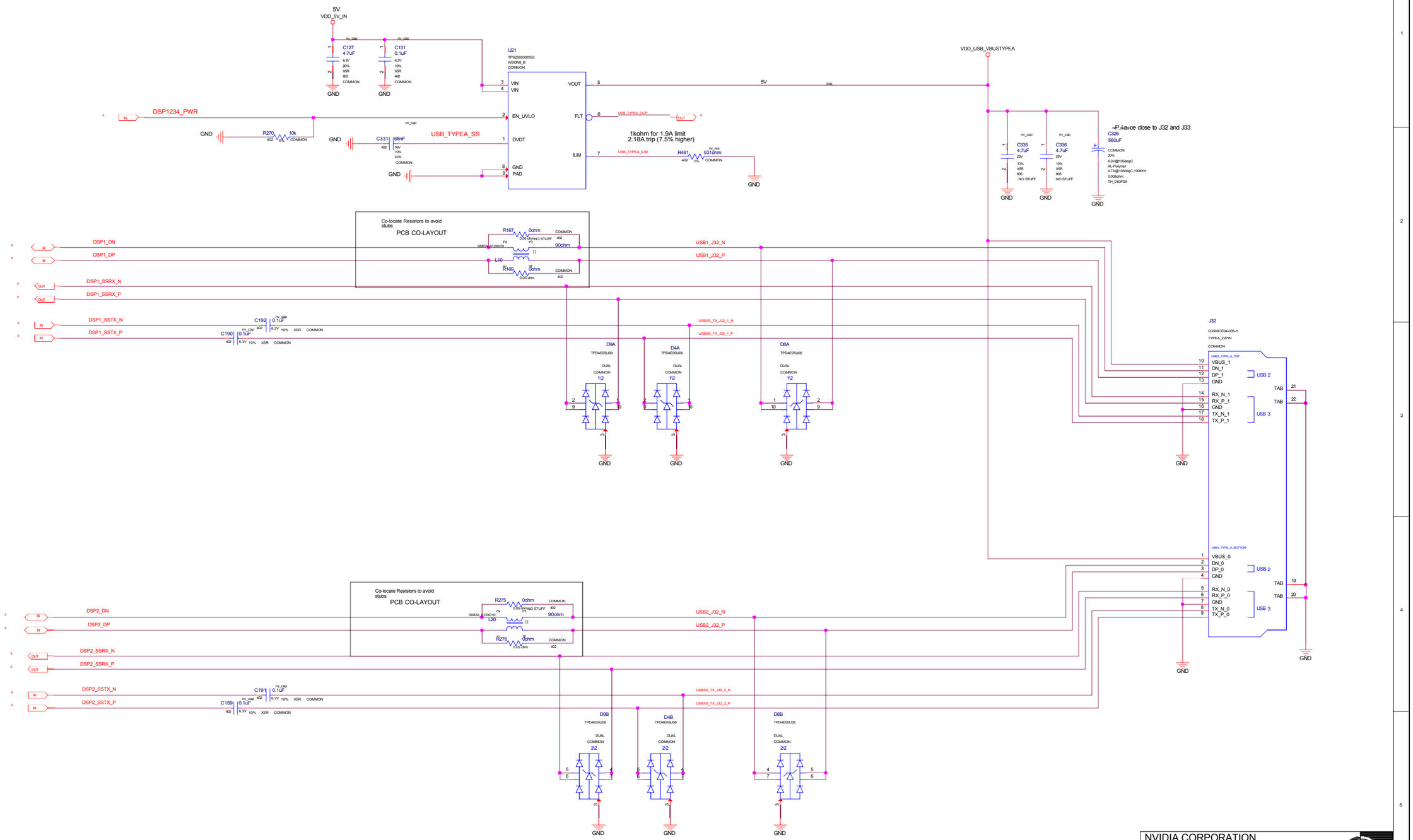

ASSEMBLY	Jetson Nano Carrier Board
PAGE DETAIL	USB3.1 Type-A x2 (A)

ALL NVIDIA DESIGN SPECIFICATIONS, REFERENCE SPECIFICATIONS, REFERENCE BOARDS, FILES, DRAWINGS, DIAGNOSTICS, LISTS AND OTHER DOCUMENTS OR INFORMATION (TOGETHER AND SEPARATELY, 'MATERIALS') ARE BEING PROVIDED 'AS IS'. THE MATERIALS CONTAIN KNOWN AND UNKNOWN VIOLATIONS OR DEVIATIONS OF INDUSTRY STANDARDS AND SPECIFICATIONS. NVIDIA MAKES NO WARRANTIES, EXPRESSED, IMPLIED, STATUTORY OR OTHERWISE WITH RESPECT TO THE MATERIALS OR OTHERWISE, AND EXPRESSLY DISCLAIMS ALL IMPLIED WARRANTIES INCLUDING, WITHOUT LIMITATION, THE WARRANTIES OF DESIGN, OF NONINFRINGEMENT, MERCHANTABILITY OR FITNESS FOR A PARTICULAR PURPOSE, OR ARISING FROM A COURSE OF DEALING, TRADE USAGE, TRADE PRACTICE, OR INDUSTRY STANDARDS.

NVIDIA CORPORATION
2701 SAN TOMAS EXPRESSWAY
SANTA CLARA, CA 95050, USA

NV_PN			
PCB REV		PAGE	9 OF 23
BOM REV	A	DATE	08-MAY-2019

以上内容仅为本文档的试下载部分，为可阅读页数的一半内容。如要下载或阅读全文，请访问：https://d.book118.com/808015023114006110