DTC	B1805/52	Short in Front Passenger Side Squib Circuit

DTC	B1806/52	Open in Front Passenger Side Squib Circuit

DTC	B1807/52	Short to GND in Front Passenger Side Squib Circuit

DTC	B1808/52	Short to B+ in Front Passenger Side Squib Circuit

DESCRIPTION

The front passenger side squib circuit consists of the center airbag sensor assembly and the front passenger airbag assembly.
The circuit signals the SRS to deploy when deployment conditions are met.
These DTCs are recorded when a malfunction is detected in the front passenger side squib circuit.

RS

DTC No.	DTC Detection Condition	Trouble Area
B1805/52	• Center airbag sensor assembly detects line short circuit signal in front passenger side squib circuit 5 times during primary check. • Front passenger side squib malfunction • Center airbag sensor assembly malfunction	• Instrument panel wire • Instrument panel wire assembly • Front passenger airbag assembly (Front passenger side squib) • Center airbag sensor assembly
B1806/52	• Center airbag sensor assembly detects open circuit signal in front passenger side squib circuit for 2 seconds. • Front passenger side squib malfunction • Center airbag sensor assembly malfunction	• Instrument panel wire • Instrument panel wire assembly • Front passenger airbag assembly (Front passenger side squib) • Center airbag sensor assembly
B1807/52	• Center airbag sensor assembly detects short circuit to ground signal in front passenger side squib circuit for 0.5 seconds. • Front passenger side squib malfunction • Center airbag sensor assembly malfunction	• Instrument panel wire • Instrument panel wire assembly • Front passenger airbag assembly (Front passenger side squib) • Center airbag sensor assembly
B1808/52	• Center airbag sensor assembly detects short circuit to B+ signal in front passenger side squib circuit for 0.5 seconds. • Front passenger side squib malfunction • Center airbag sensor assembly malfunction	• Instrument panel wire • Instrument panel wire assembly • Front passenger airbag assembly (Front passenger side squib) • Center airbag sensor assembly

DTC	B1805/52	Short in Front Passenger Side Squib Circuit

DTC	B1806/52	Open in Front Passenger Side Squib Circuit

DTC	B1807/52	Short to GND in Front Passenger Side Squib Circuit

DTC	B1808/52	Short to B+ in Front Passenger Side Squib Circuit

DESCRIPTION

The front passenger side squib circuit consists of the center airbag sensor assembly and the front passenger airbag assembly.
The circuit signals the SRS to deploy when deployment conditions are met.
These DTCs are recorded when a malfunction is detected in the front passenger side squib circuit.

RS

DTC No.	DTC Detection Condition	Trouble Area
B1805/52	• Center airbag sensor assembly detects line short circuit signal in front passenger side squib circuit 5 times during primary check. • Front passenger side squib malfunction • Center airbag sensor assembly malfunction	• Instrument panel wire • Instrument panel wire assembly • Front passenger airbag assembly (Front passenger side squib) • Center airbag sensor assembly
B1806/52	• Center airbag sensor assembly detects open circuit signal in front passenger side squib circuit for 2 seconds. • Front passenger side squib malfunction • Center airbag sensor assembly malfunction	• Instrument panel wire • Instrument panel wire assembly • Front passenger airbag assembly (Front passenger side squib) • Center airbag sensor assembly
B1807/52	• Center airbag sensor assembly detects short circuit to ground signal in front passenger side squib circuit for 0.5 seconds. • Front passenger side squib malfunction • Center airbag sensor assembly malfunction	• Instrument panel wire • Instrument panel wire assembly • Front passenger airbag assembly (Front passenger side squib) • Center airbag sensor assembly
B1808/52	• Center airbag sensor assembly detects short circuit to B+ signal in front passenger side squib circuit for 0.5 seconds. • Front passenger side squib malfunction • Center airbag sensor assembly malfunction	• Instrument panel wire • Instrument panel wire assembly • Front passenger airbag assembly (Front passenger side squib) • Center airbag sensor assembly

WIRING DIAGRAM

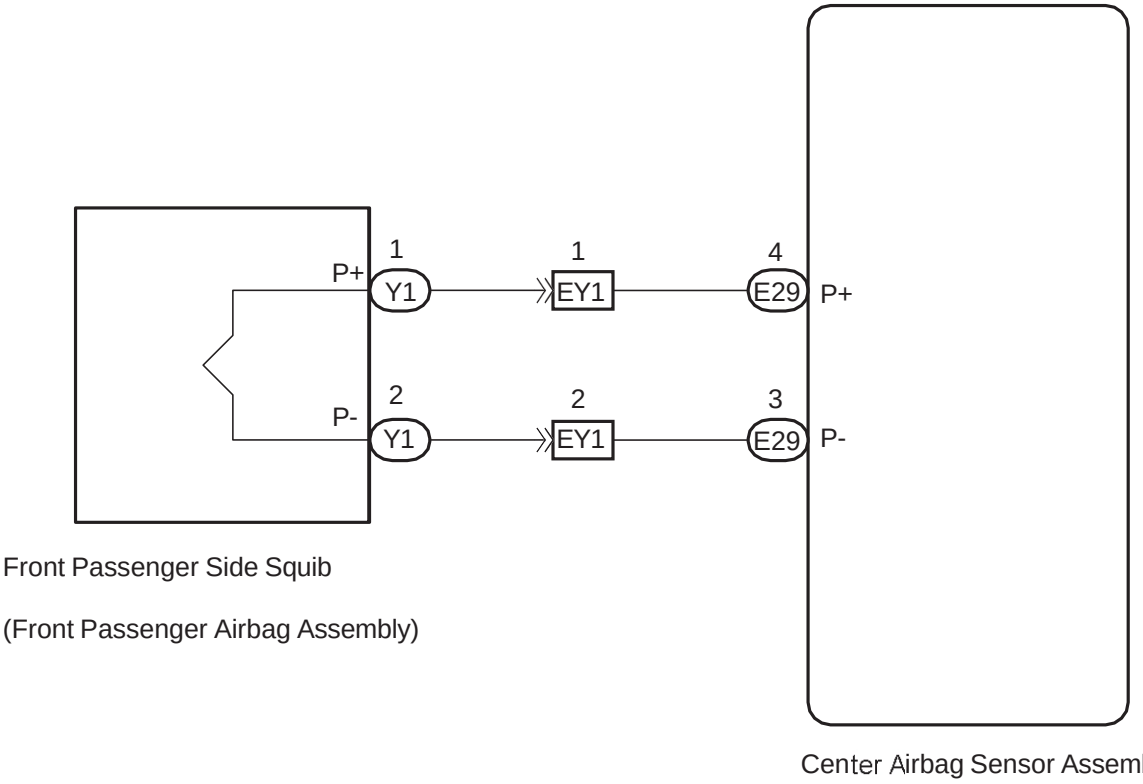

INSPECTION PROCEDURE

HINT:

- Perform the simulation method by selecting CHECK MODE (signal check) with the intelligent tester (See page RS-39).
- After selecting CHECK MODE (signal check), perform the simulation method by wiggling each connector of the airbag system or driving the vehicle on a city or rough road (See page RS-29).

1	**CHECK CONNECTOR (FRONT PASSENGER AIRBAG - INSTRUMENT PANEL WIRE ASSEMBLY)**

(a) Turn the ignition switch off.
(b) Disconnect the negative (-) terminal cable from the battery, and wait for at least 90 seconds.
(c) Check the instrument panel wire assembly connector and terminals (on the front passenger airbag side) and the connector is properly connected to the front passenger airbag.

WIRING DIAGRAM

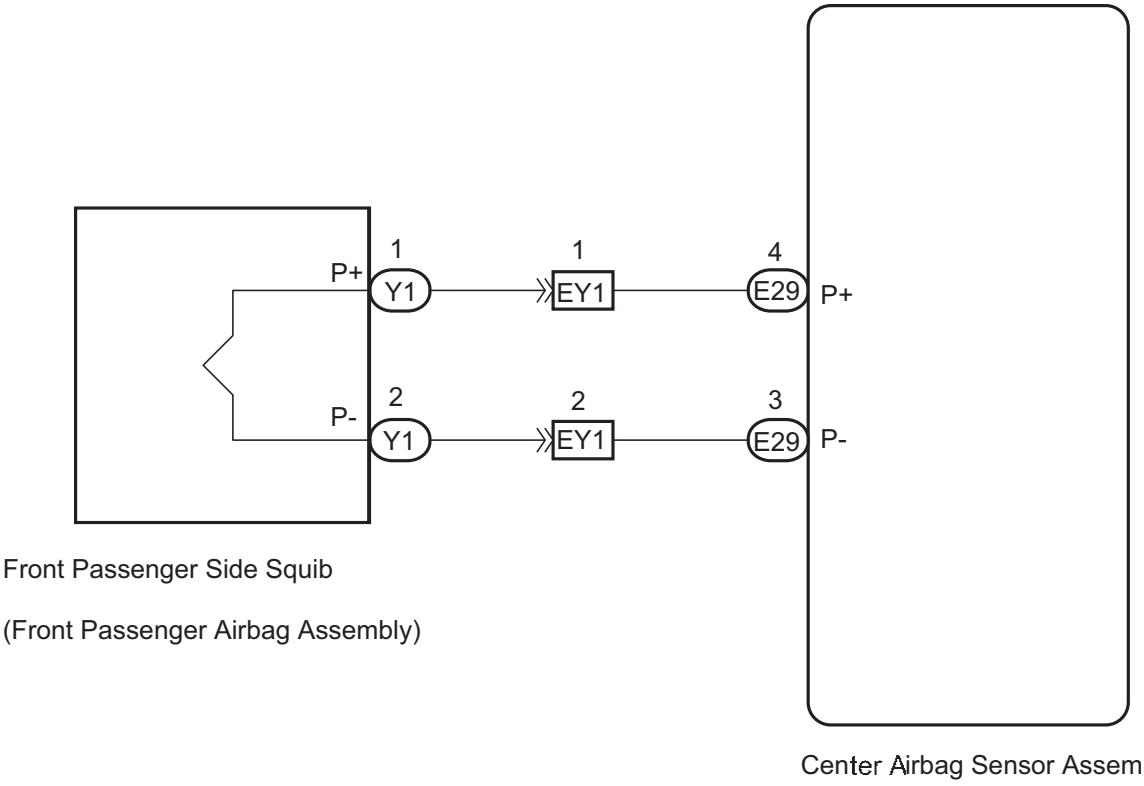

RS

INSPECTION PROCEDURE

HINT:

- Perform the simulation method by selecting CHECK MODE (signal check) with the intelligent tester (See page RS-39).
- After selecting CHECK MODE (signal check), perform the simulation method by wiggling each connector of the airbag system or driving the vehicle on a city or rough road (See page RS-29).

1	**CHECK CONNECTOR (FRONT PASSENGER AIRBAG - INSTRUMENT PANEL WIRE ASSEMBLY)**

(a) Turn the ignition switch off.
(b) Disconnect the negative (-) terminal cable from the battery, and wait for at least 90 seconds.
(c) Check the instrument panel wire assembly connector and terminals (on the front passenger airbag side) and the connector is properly connected to the front passenger airbag.

以上内容仅为本文档的试下载部分，为可阅读页数的一半内容。如要下载或阅读全文，请访问：https://d.book118.com/867033120155006032